Design and Development of a Programmable Logic Controller Using Atmel Controller and MATLAB Simulink

Priyam Parikh[#], Himanshu Singh[*], Selva Kumar Nadar[$]

[#] *Assistant Professor, Mechatronics Department, SAL College of Engineering*

[*$] *UG Student, Electronics & Communication Engineering, Department, Amiraj College of Engineering & Technology*

***Abstract*— This document shows an in-depth introduction into programmable logic controllers (PLCs) interfaced with matlab for better and easier task fulfilling operations in an industry. This article starts with an overview of the history and the role PLCs in factory automation.**

***Keywords*— PLC, Relay Unit, MATLAB hardware support package, Serial Communication, ATMEL Controller, MATLAB, motors, encoder**

I. Introduction

A PLC is digital operating electronic apparatus which uses a programmable memory for internal storage of instruction for implementing specific function such logic, sequencing, timing, counting and arithmetic to control through analog or digital input/output modules various type of machines or process.

The core modules of an industrial-control system are examined: the analog input function, analog output functions, the distributed control (fieldbus) interface, digital inputs and outputs (I/Os), the CPU, and isolated power[2]

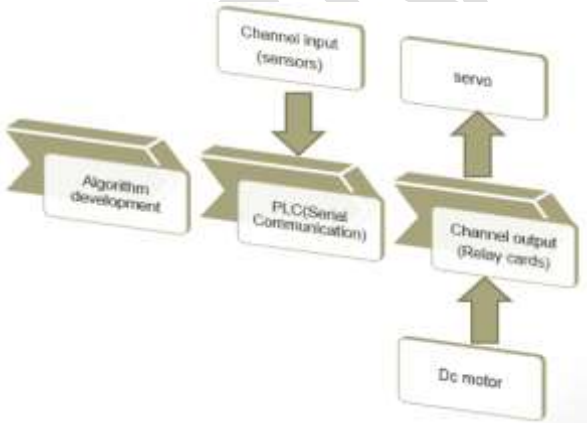

Fig. 1 Block diagram of a typical plc

This document shows the design of a controller based PLC which would have 8 channel I/O and 6 channel analog Input. The system would have an AVR micro-controller and would also have relay cards to interface motors like DC, stepper, servo and AC motors too. Here Software MATLAB (Simulink) is used to establish a serial communication with the PLC which is much easier than writing a machine language program. One can program this plc by just placing the desired blocks into it.[7]

A. Methodology

This document explains how the actual plc works. First, the plc is programmed normally by developing an algorithm for the plc to work in the MATLAB hardware support package and feed it to the plc using inbuilt I2C or SPI. [1]

Now as the plc is ready to use the hardware connections for the desired task is to be done. External power is required to power the relay cards and also the plc. If not, the plc can be given the power supply using usb cable connected to the algorithm developing device.[3]

B. Objectives

The main objectives of the project are as follows:

- Reduce programming time.
- Free up more memory in the controller compared to code feeded controller.
- Easy and quick interface.
- I/O ports interface and access as needed.
- Multiple output run simultaneously.

C. Arduino

This section explains about the heart of the plc prototype. This prototype contains the microcontroller based prototyping open source platform called “Arduino” which also uses Atmel controller. It connects to a computer via a USB cable, and is programmed using it with a language similar to C++.[4]-[6]

The Arduino has a number of input ports which can be used to read in signals from other circuits or devices, and output ports which can be used to drive external lights, speakers, motors etc.[8]

TABLE 1

Arduino Uno description

Microcontroller	ATmega328p
Operating Voltage	5 V
Input Voltage(recommended)	7-12 V
Input Voltage(limit)	6-20 V
Digital I/O Pins	14(including 6 pins as PWM)
PWM Digital I/O Pins	6
Analog Input Pins	6
DC Current per I/O Pin	20 mA
DC Current per 3.3V Pin	50 mA
Flash Memory	32 KB (ATmega328P) of which 0.5KB is used by boot loader
SRAM	2 KB (ATmega328P)
EEPROM	1 KB (ATmega328P)
Clock Speed	16 MHz
Length	68.6 mm
Width	53.4 mm
Weight	25 g

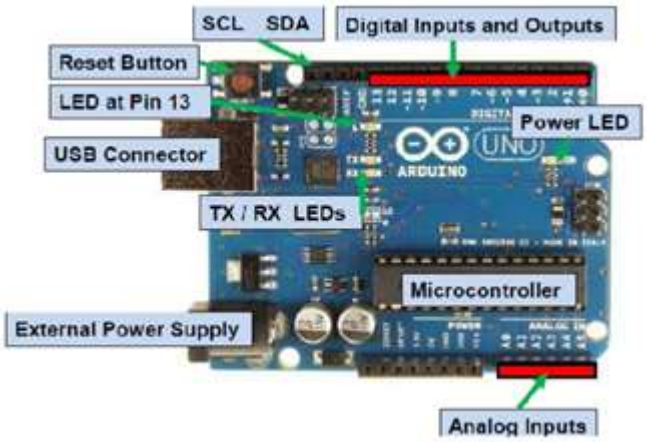

Fig.2 Arduino Uno prototyping board

D. Arduino and matlab (Simulink)

The MATLAB Support Package makes it easy to directly control and read the digital and analog pins on Arduino which is the current plc prototyping board. One can easily program this plc prototype by just putting some things together. This project can also be easily used for data acquisition and thus used for monitoring devices in an industry. The matlab hardware support package also has additional functionality for I2C and SPI to communicate between the devices and hardware plc is communicated using serial communication.[12]

In the real simulation done on the target hardware i.e., the plc prototyping board, a simple input output device is tested first. So, a normal LED is interfaced to it and in the matlab Simulink the necessary blocks are added. Then by following the required steps as explained before, running the Simulink block configuration directly to the plc prototyping board, it starts blinking the LED interfaced with it. Choosing the correct output pin and controlling it with a pulse generator, the above trick will be achieved. The following figure shows the image captured for the above explained procedure.[8]

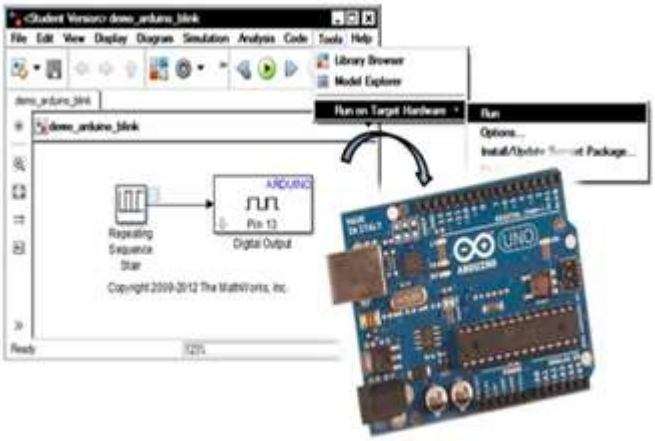

Fig.3 Arduino with MATLAB Simulink

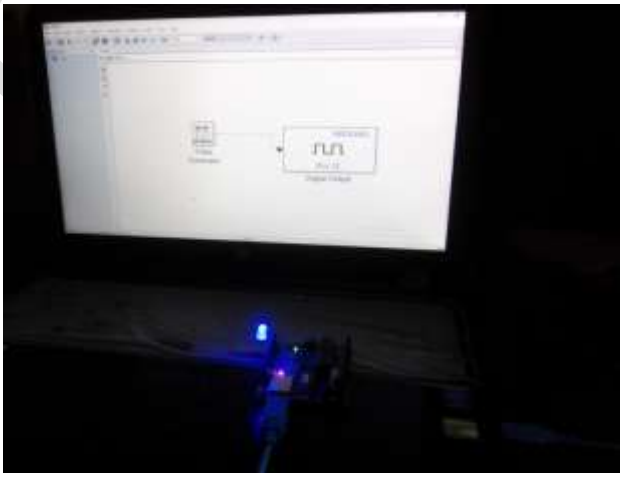

Fig.4 Real time simulation of LED blinking using the plc prototyping board interfaced to MATLAB Simulink

E. Dc motor control

This paper conveys the method to control a simple DC motor using MATLAB Simulink. But at first the rough sketch schematic for the plc used dc motor control is done using Arduino as the plc. The PLC prototyping board is first connected to the algorithm developing device and the developed algorithm using the Simulink block in hardware support package and feeded to the PLC prototyping board. Here in the interface to run and drive the motor a relay is used. Basically H-bridge motor driver is used, but also for

higher level of implementation, motor driver relays with ULN2003 A are used. [9]

Here in the schematic an LED is placed in parallel to indicate the status of the motor. Now the complete hardware circuit setup is made and then the hardware is connected to necessary power and runned. The following will show how to interface a simple dc motor with Arduino and run it. In the schematic, the Arduino is connected to the motor driver relay and then cascaded with the motors. A simple push button controls the dc motor.[10]

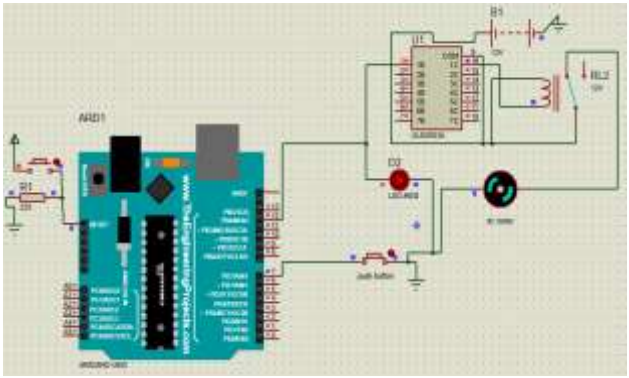

Fig.5 DC motor control Simulation using the plc prototyping board

In this real hardware simulation of the plc prototyping board controlling the dc motor is as shown in the following figure. The plc prototyping board is interfaced with the dc motor in the desired pin for output. Then as explained before, the Simulink configuration block is feeded to the plc prototyping board and later the real simulation is done where it shows the functioning of the motor in one direction. Later the Simulink blocks can re-arranged and by adding some blocks the motor can be functioned bidirectional.[11]

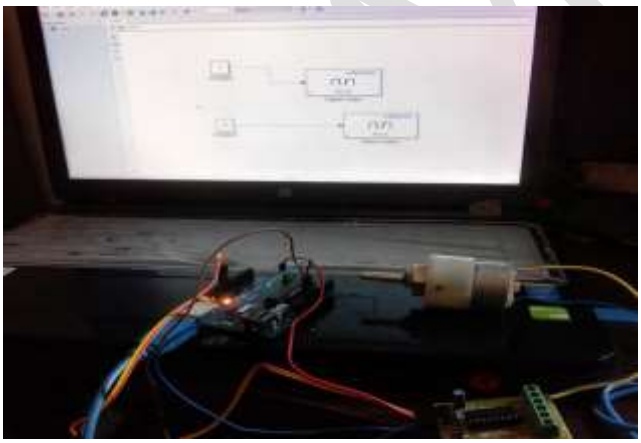

Fig.6 Real time simulation of DC motor using the plc prototyping board interfaced to MATLAB Simulink

F. Servo motor control

In this project the PLC prototyping hardware along with the relay card is also capable of driving servo motor. Here the procedure to follow is as same as in driving the DC motors. The input given to the PLC prototyping board is through a sensor say potentiometer or as given in the schematic, a pushbutton for instance. After developing the algorithm to run servo motors it is then feeded to the PLC prototyping board and so the relay card is now also capable of driving the servo motors also. In the schematic structure, a pushbutton is interfaced with the plc prototyping board and then the uln2003A relay unit attached with it operates and controls the servo motor. In the following schematic, the servo motor controlled by the relay unit attached with Arduino having ATmega328P microcontroller is used as a plc prototyping board for now. But as of in future, a complete new form of plc prototyping board will be developed. Here in the schematic, a simple pushbutton is used to control the servo motor and an led is attached to notify the current status of the servo motor.[13]

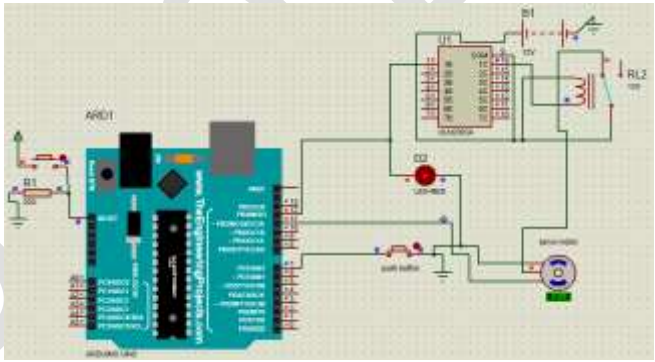

Fig.7 Servo motor control Simulation using the plc prototyping board

Now in the real simulation of the hardware using the plc prototyping board which is now interfaced to the servo motor is controlled by just feeding the matlab Simulink blocks to it. To keep running, the simulation time is set to infinite. Later after feeding the Simulink blocks, the servo is completely operational and by changing the blocks the servo operations can be changed according to application. The following figure shows the real hardware simulation as explained before.[14]

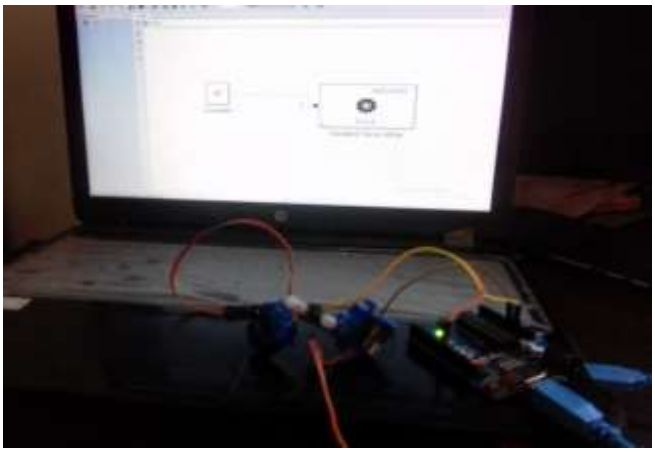

Fig.8 Real time simulation of Servo motor control using the plc prototyping board interfaced to MATLAB Simulink

G. Analog sensor and PWM control

In this project, the plc prototyping board is also capable of controlling the PWM controls and say for instance a servo motor. Here in this project an analog sensor, say a potentiometer is attached to the plc prototyping board like Arduino attached here. The values obtained from the potentiometer is given directly to the servo motor. Hence, the potentiometer interfaced here acts like a analog sensor and it controls the servo motor giving it PWM pulses to control it. In the following schematic, the plc prototyping board is interfaced to a potentiometer as a analog sensor and as an output indication the PWM controlled servo motor is attached.[17]-[19]

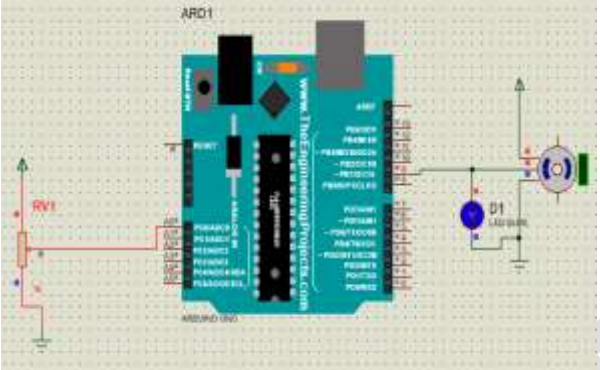

Fig.9 Analog sensor and motor control Simulation using the plc prototyping board

In this plc prototyping board controlled by just adding necessary blocks available in matlab Simulink can also drive a PWM control interfaced along with an analog sensor. In the Simulink, the blocks that are necessary are first feeded to the plc prototyping board and then the hardware simulation is done. The following figure shows the image of the real hardware simulation of a PWM controlled servo motor with a simple dual axis potentiometer as an analog sensor.[15] , [16]

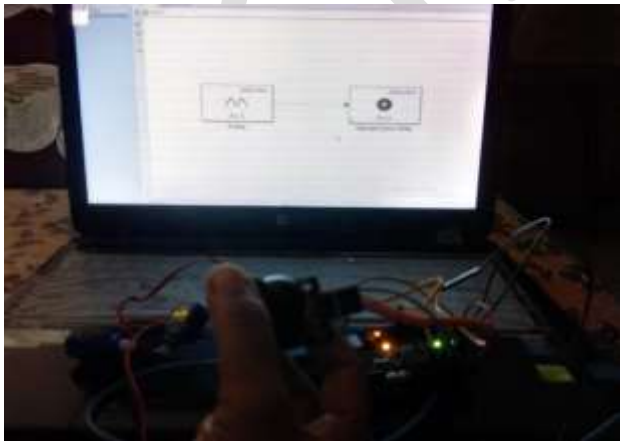

Fig.10 Real time simulation of Analog sensor with PWM control using the plc prototyping board interfaced to MATLAB Simulink

II. CONCLUSION

This document concludes about the formation of making a plcusing the base of Arduino as a plc prototyping board and also when interfaced with MATLAB Simulink, the programming part for preparing any model like interfacing sensors, motors, LEDs, etc. is made easy. Whereas code feeding and bootloader burning is not required here, the blocks arranged in the MATLAB Simulink is hardly taking time more than it does when real time processors , plc coding is done.

ACKNOWLEDGMENT

I have taken efforts in this project. However, it would not have been possible without the kind support and help of many individuals and organizations. I would like to extend my sincere thanks to all of them.

I am highly indebted to Pooja Dudhat for their guidance and constant supervision as well as for providing necessary information regarding the project & also for their support in completing the project.

I would like to express my gratitude towards my parents & member of Hi – Tech Drives for their kind co-operation and encouragement which help me in completion of this project.

I would like to express my special gratitude and thanks to Priyam Parekh for giving me such attention and time. My thanks and appreciations also go to my colleague in developing the project and people who have willingly helped me out with their abilities.

REFERENCES

[1]. Gajjar B, Sheth S. Design and Automation in Back Plug Press Fitting Process of Ball Pen Assembly. Applied Mechanics and Materials. 2014; 592(2):596–2600.

[2]. Gajjar B, Sheth S. Investigation of Automation Strategy and Its effect on Assembly Cost: A Case Study on Ball Pen Assembly Line. International Journal of Current Engineering and Technology, Special. 2012; 3:89–92

[3]. Bhavsar S, Parikh P. Actuation of hydraulic and Pneumatic system using DTMF technology. Proceedings of International Conference on Innovations in Automation and Mechatronics Engineering, G.H. Patel College of Engineering and Technology, India. 2013 Feb. p. 184–90.

[4]. Parikh P, Joshi K, Sheth S. Color Guided Vehicle-An Intelligent Material Handling Mechatronic System. Proceedings of the 1st International and 16th National Conference on Machines and Mechanisms (iNaCoMM2013), IIT Roorkee, India. 2013. p. 628–35.

[5]. Parikh P, Shah H, Sheth S. A Mechatronics design of a line tracker robot using Ziegler Nichols control technique for P, PI and PID controllers. International Mechanical Engineering Congress (IMEC-2014), NIT Trichy, India. 2014; 3(10):963–66.

[6]. Parikh P, Shah H, Sheth S. Development of a multi-channel wireless data acquisition System for swarm robots – A Mechatronic Approach using Arduino UNO and MATLAB. International Journal of Engineering Development and Research (IJEDR). 2014; 2(1):717–25.

[7]. Patel T, Sheth S Patel P. Design of Semi automaticHydraulic Blanking Machine using PLC. National Conference on Innovative and Emerging Technologies (NCIET- 2015). 2015 Apr. p. 410–2.

[8]. Sheth S, Kher R, Shah R, Dudhat P, Jani P. Automatic Sorting System using Machine Vision. Multi-Disciplinary International Symposium on Control, Automation and Robotics. 2010; 1–6.
[9]. Tamboli K, Sheth S, Shah V, Modi V, Gandhi, Amin N. Design and Development of a Mechatronic System for the Measurement of Railway Tracks. Discovery. 2015; 43(200):174–80.
[10]. Virani M, Vekariya J, Sheth S, Tamboli K. Design and Development of Automatic Stirrup Bending Mechanism. Proceedings of 1st International and 16th National Conference on Machines and Mechanisms (iNaCoMM2013), IIT Roorkee, India. 2013. p. 598–606.
[11]. Parikh P, Sheth S, Patel T. Positional Analysis of a DC brushed Encoder Motor using Ziegler-Nichols Algorithm. CAD/CAM, Robotics and Factories of the Future, Springer India. 2016; 5(2):637–50.
[12]. Chauhan V, Sheth S, Hindocha B, Shah R, Dudhat P, Jani P. Design and development of a machine vision system for part color detection and sorting, Proceedings of Second International Conference on Signals, Systems and Automation, ICSSA- 2011, Gujarat, India. 2011. p. 90–3.
[13]. Vaghasiya M, Moradia H, Nayi R, Sheth S, Hindocha B. Modeling of an automatic positioned, A mechatronics approach. 4th National Conference on Recent Advances in Manufacturing. 2014. p. 284–88.
[14]. Desai S, Sheth S. Study and proposed design of Centrifugal Casting Machine for manufacturing of turbine bearing. International Conference on Mechanical, Material, Industrial, Automotive and Aeronautical and NanoTechnology (MIANT-2015) Jawaharlal Nehru University, New Delhi, India. 2105. p. 34–7.
[15]. Desai S, Sheth S. Proposed Design of Centrifugal Casting Machine for Manufacturing of Turbine Bearing. National Conference on Advances and Challenges in Engineering and Science (NCACES-2012), L. C. Institute Of Technology, Bhandu, Mehsana, India. 2012.
[16]. Desai S, Sheth S, Chauhan P. Design and Modelling of Dual faceplate Centrifugal casting equipment for manufacturing of turbine bearing, CAD/CAM, Robotics and Factories of the Future, Springer India. 2016; 523–34.
[17]. Sheth S, Patel Kavit H, Patel H. Design of Automatic Fuel Filling system using a mechatronics approach. CAD/CAM, Robotics and Factories of the Future, Springer India. 2016; 785–95.
[18]. Gangadia H, Sheth S, Chauhan P. Design and modelling of special Purpose Equipment for shell-diaphragm welding in conveyer pulley. Procedia Technology. 2014; 14:497–505.
[19]. Rizwan JM, Krishnan PN, Karthikeyan R, Kumar SR. Multi layer perception type artificial neural network based traffic control. Indian Journal of Science and Technology. 2016 Feb 9; 9(5):1–6.