Design and Implementation of Solar Charge Controller with MPPT Algorithm Using Synchronous Buck Converter: Arduino Based

Aniket Ujawane

Mtech Student,
Department Electrical Engineering,
Veermata Jijabai Technological Institute,
Matunga, Mumbai, 400019

Prof. P. B. Borole

Associate Professor
Department Electrical Engineering,
Veermata Jijabai Technological Institute,
Matunga, Mumbai, 400019

***Abstract*— In a world of increasing energy demand, it is imperative to come up with innovative solutions to reduce and conserve energy use. There is a significant interest in creating an environmentally friendly system that will save money on electricity and maximize the cost return on investment for solar panels. The photovoltaic industry continues to strive to create efficient and inexpensive systems that can be competitive with other energy sources. The irradiation and temperature are not stable for a PV panel, therefore the electricity generations of the PV panel is not stable. So the maximum power point tracking (MPPT) techniques are used to give the highest power to the loads or batteries. The MPPT process with Perturb and Observe method is performed with a power electronic circuit and it overcomes the problem of voltage mismatch between the PV panels and the batteries/loads. In this study, an Arduino Nano (microcontroller) is employed to develop battery charge control system for PV panels. The proposed system is composed of an Arduino Nano, sensors, synchronous buck converter, a Wi-Fi module (ESP8266), USB charging circuit, PV panel and battery. The program of all circuitry is embedded within the microcontroller.**

***Keywords*— Photovoltaic (PV) panel, Arduino, Maximum Power Point Tracking (MPPT), Synchronous Buck Converter, P&O MPPT Algorithm, Current Sensor (ACS712)**

I. INTRODUCTION

Travelling at the speed of light, it takes sunlight eight minutes and twenty seconds to reach Earth's surface. Solar energy, in the form of irradiance or sunlight and thermal energy or heat, is one of the most abundant and cleanest energies used on planet Earth. Solar energy is considered a renewable source. Around 23% of rural India continues to use Traditional Fuels such as firewood's, Crop residue and dung cakes. This too have environmental and health concerns as their combustion releases poisonous gasses. In recent years decentralised clean energy sources have increased and Use of portable solar cookers is catching up. This is important part of government agenda of 'Inclusive and Sustainable development'. Renewable energy sources are necessary to consider in accordance to environmental protection for future generation [1]. Solar power is one of the important topics in renewable energy sources.

PV panels have a nonlinear voltage-current characteristic [2][3], with a distinct maximum power point (MPP), which depends on the environmental factors, such as temperature and irradiation. The duty ratio has to be changed depending on the load as well as climate changing to achieve the maximum possible harvested power from the given PV Automatically and this technique is called Maximum Power Point Tracking (MPPT) [4]. The overall objective of this study is to design an efficient charge controller. This means designing a system with microcontroller, sensors, and electronics necessary to monitor and adjust the power while consuming as little of the power as possible.

II. HARDWARE DESIGN

Solar charge controller consist of tracking sensors (voltage and current sensors), synchronous buck converter , LCD display, Li-ion battery, battery charging circuit, wireless module and USB charging circuit. Arduino Nano is used for controlling complete circuitry. Arduino Nano programmed by master controller (i.e. PC).

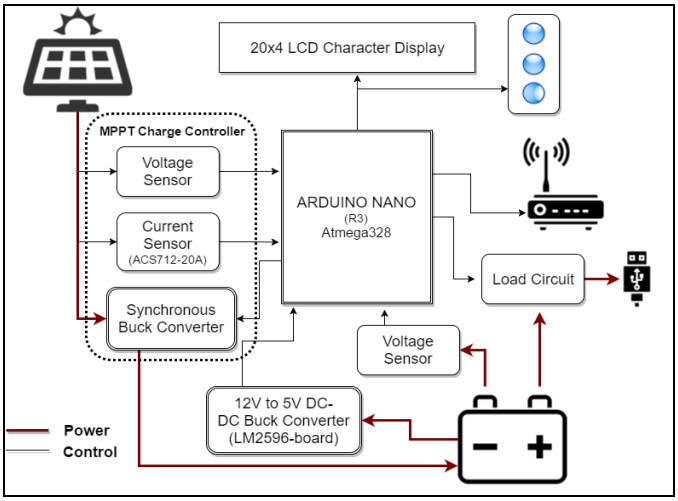

An MPPT charge controller determines the overall output power of the system, which uses tracking sensors to real time value of the output voltage (V) and current (A) of the panel [5]. A buck converter lowers the input voltage [6]. Wireless Module ESP8266 version 01 is used for the data logging. LCD and some LEDs are shows the status of the circuit like battery charging level and status, output power, load etc.

A. Solar Panel Module

A photovoltaic module is a packaged, connected assembly of solar cells. A single solar module can produce only a limited amount of power; most installations contain multiple modules, but in this project we are connecting only one panel. Specification of solar panel is given below.

Maximum Power	=	50W ±5%
Maximum Power Voltage	=	17.25 V
Maximum Power Current	=	2.9 A
Open Circuit Voltage	=	21.3 V
Short Circuit Current	=	3.17 A
Weight	=	≈6 Kgs

B. MPPT Unit

MPPT unit consists of DC to DC synchronous Buck Converter, voltage and current sensors, three LED to show the current charge status, LCD to display output parameters as shown in Fig 1. The panel output is fed to a synchronous buck mode DC-DC converter that steps down the panel voltage to a usable voltage appropriate for battery charging. The switching pulse (PWM) necessary to operate the DC-DC converter is generated by Atmega328 microcontroller. The duty cycle of the PWM to the DC to DC converter that separates the panel and the battery is varied by a small according to the MPPT algorithm. Sensed solar voltage, current and battery voltage are sent to the PC through the wireless Wi-Fi module.
Digital pin of D8, D9 of Arduino are used to provide PWM to IR2104 MOSFET driver IC. A0 used as PV voltage sensor input, A1 used as current sensor input and A2 used as battery voltage sensor input to Arduino. Digital pin D11, D12, D13 are connected to three LEDs to indicate the current charge status i.e. ON state, buck state, float state or OFF state. Analog pin A4 and A5 are connected to 20x4 character LCD to display solar output parameters for solar panel, battery, PWM and load. Digital pin D2 and D3 are connected to ESP8266 module for data logging.

1) Synchronous Buck Converter: A synchronous buck converter produces a regulated voltage that is lower than its input voltage, and can deliver high currents while minimizing power loss. As shown in Fig. 2, the synchronous buck converter is comprised of two power MOSFETs, an output inductor and an output capacitor. This specific buck topology derives its name from the control method of the two power MOSFETs; the on / off control is synchronized in order to provide a regulated output voltage and to prevent the MOSFETs from turning on at the same time.

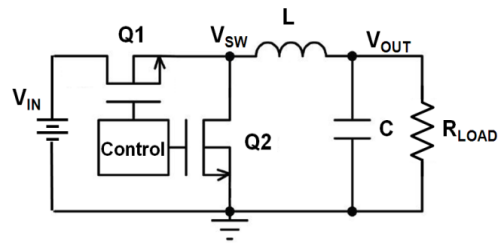

Figure 1: Synchronous Buck Converter

Q1, the high side MOSFET, is connected directly to the input voltage of the circuit. When Q1 turns on, current is supplied to the load through the high side MOSFET. During this time, Q2 is off and the current through the inductor increases, charging the LC filter. When Q1 turns off, Q2 turns on and current is supplied to the load through the low side MOSFET. During this time, the current through the inductor decreases, discharging the LC filter. The low side MOSFET provides an additional function when both MOSFETs are off. The high side MOSFET on-time determines the duty cycle of the circuit, and is defined in Equation 1.

$$D = \frac{t_{ON,HS}}{t_{ON,HS}+t_{OFF,HS}} = \frac{V_{OUT}}{V_{IN}} \qquad \text{…….(1)}$$

The output stage of the synchronous buck converter is comprised of an inductor and capacitor. The output stage stores and delivers energy to the load. A minimum inductance and capacitance must be considered in order to meet the ripple current and ripple voltage requirements of the specific application circuit. When designing the buck converter output stage, it is recommended to begin with the inductor. Equation 2 shows a minimum inductance neglecting the high side and low side MOSFET voltage drops where the duty cycle is estimated from equation 1.

$$L_{MIN} = \frac{(V_{IN} - V_{OUT}) \times D}{LIR \times I_{OUT,MAX} \times f_{SW}} \qquad \text{…….(2)}$$

To optimize the output filter performance it is recommended to target 20% - 40% inductor ripple current, which translates to an LIR of 0.2 - 0.4. Equation 3 considers the effect of output ripple voltage and inductor ripple current on the output capacitance and gives the minimum capacitance.

$$C_{MIN} = \frac{LIR \times I_{OUT,MAX}}{8 \times f_{SW} \times CVR \times V_{OUT}} \qquad \text{…….(3)}$$

Equation 4 considers transient load response capability of the output stage and gives the minimum capacitance.

$$C_{MIN} = \frac{L \times I_{PK}}{(V_{OV} + V_{OUT})^2 - V_{OUT}} \qquad \text{…….(4)}$$

Where, V_{OV} (overshoot voltage) is output voltage overshoot and IPK is defined by equation 5.

$$I_{PK} = I_{OUT,MAX} \times \frac{\Delta I_L}{2} \qquad \text{…….(5)}$$

Both Equations 3 and 4 must be taken into consideration when selecting the output capacitance. There is a trade-off between the output voltage transient response and output voltage ripple. These two must be balanced for the needs of the specific

application. Calculated values for the design is given in table 2.

Table 1 Design Parameters and Values

Parameter	Symbol	Value
Input Voltage	V_{IN}	15V
Output Voltage	V_{OUT}	12V
Switching Frequency	f_{SW}	50kHz
Inductor Current Ripple Ratio	LIR	1.47A (35%)
Capacitor Voltage Ripple Ratio	CVR	20mV
Maximum Output Current	$I_{OUT;MAX}$	≈ 4.2A

Table 2 Calculated Values

Parameter	Symbol	Value
Duty Cycle	D	0.8 or 80%
Inductor	L_{MIN}	≈ 33uH
Capacitor	C_{MIN}	≈ 220uF
Peak Current	I_{PK}	5A

2) Solar and Battery Voltage sensor: In this project we have to constantly monitor the battery and solar voltage. Unfortunately, sensor can only measure voltages up to 5V. The values of resistance (R1 & R2) of a voltage divider circuit are selected such that the output voltage across R2 (V2) is not more than 5V. Resistance for voltage divider circuit is selected as R1=100K and R2=20K. The solar open circuit voltage is 21V (which is maximum solar voltage) therefore maximum voltage across R2 is 3.8V which is acceptable for voltage sensing circuit as shown in Fig -6. Before feeding this analog voltage into the Arduino, it needed to go through some filtering to maintain an accurate reading. V2 was first fed into a filtering capacitor (C1=0.1 uf) in order to smooth the output voltage and prevent noise spikes in the signal which can result false readings. The signal after filtering is fed to the Analog pin in the microcontroller .It is later used to implement the Maximum Power Point (MPP) algorithm [7].

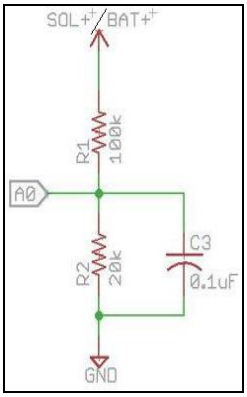

Figure 2: Voltage Sensor

The Arduino AVR chip has 10 bit A to D resolution, therefore the AnalogRead () function is used to measure the voltage as an integer between 0 and 1023. One integer's value is equal to 0.00488 V (5 V / 1024). The exact voltage across solar panel can be calculated as

$$V_{in} = (ADC\_count) * 0.0049 * (120/20) \text{ Volt} \qquad .....(6)$$

3) Solar Current Sensor: The current sensor played a significant role in the realization of the MPPT in order to achieve the maximum output power from the panel. I have used ACS712 (20A version) sensor to measure AC/DC current up to 20A. ACS712 can even measure high AC mains current and is still isolated from the measuring part due to integrated hall sensor. The board operates on 5V and has a output sensitivity of 100 mV/A.

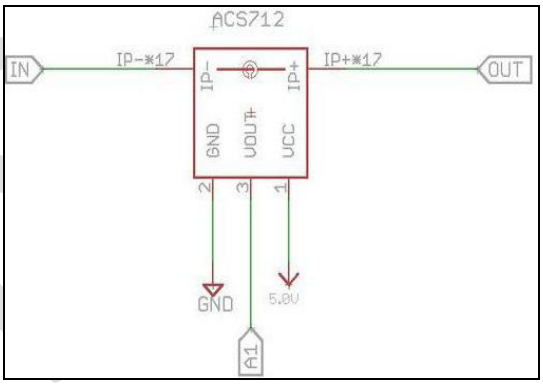

Figure 3: Current Sensor

C. Maximum Power Point Tracking Algorithm

MPPT algorithm is embedded in Arduino which adjust the duty cycle of DC to DC converter according MPPT algorithm by comparing the voltage and current of PV module. Different methods of MPPT are available such as Perturb-and-observe (P&O) method, Incremental conductance (INC) method, and Constant voltage method. For this system Perturbation and observation algorithm is used.

1) Perturb and Observe (P&O): This method is most common and simple. In this method we use two sensor, that is the voltage sensor and current sensor to sense the PV array voltage and current so the cost of implementation is less and hence easy to implement. The operating voltage is sampled and the P&O algorithm changes the operating voltage towards the maximum power point by periodically increasing or decreasing the PV array voltage. This is done by comparing power quantities between the present and past instants. If the power in the present instant is increased than the past value, the perturbation is continued in the same direction in the next perturbation cycle, otherwise the perturbation direction is reversed. This way, the operating point of the system gradually moves towards the MPP [8][9]. The flow chart of P&O methos is shown below.

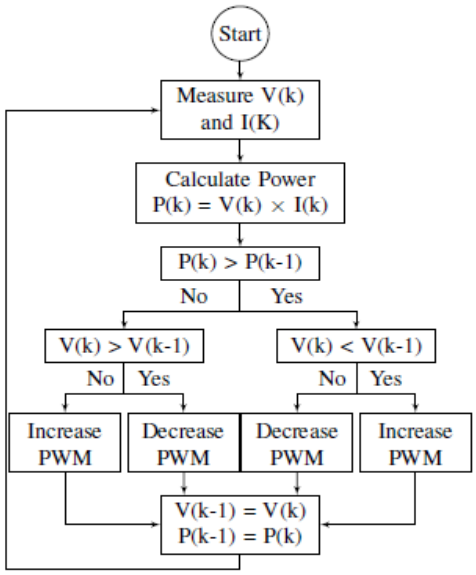

Figure 4: Perturb and Observe Method

III. RESULT

To study the effect of Maximum power point tracking technique 12V, 50W PV panel is used with 12V 7AH battery. When the load is applied the LCD shows it. The ESP8266 sends the data to the server which provides solar voltage plot, solar current plot, and solar power plot to the user.

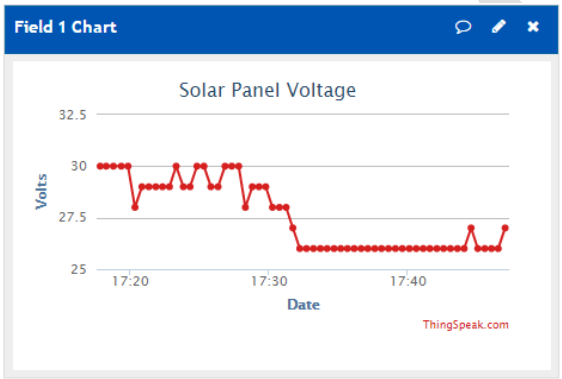

Figure 5: Solar Panel Voltage

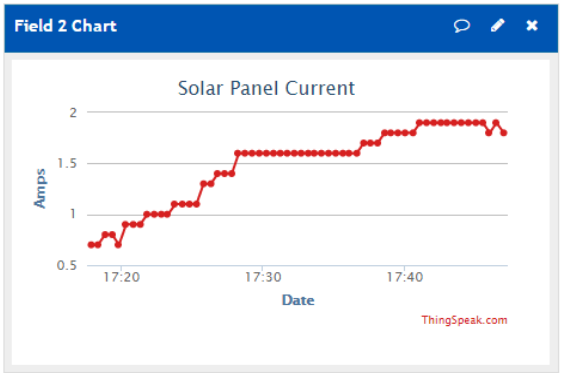

Figure 6: Solar Panel Current

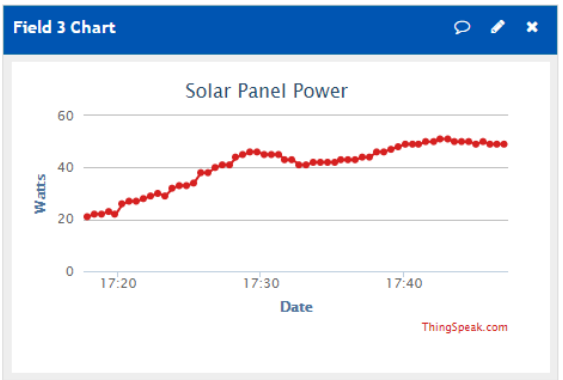

Figure 7: Solar Panel Power

IV. CONCLUSION

Experimental results conclude that MPPT based charge controller is much more effective in case of solar panel to extract the maximum power out of the panel. MPPT based charge controller increases battery health by charging the battery at constant charging current and avoiding overcharging. MPPT in conjunction with data logging is more versatile to the users as they can check the performance of the system wirelessly. It efficiently charges a DC load i.e. USB charging.

For future work, onwards from the battery an inverter can be connected to power the AC loads.

ACKNOWLEDGMENT

We would like to thank all the individuals for their guidance, help and timely support which made us to carry out the project work in stipulated time. We also thank all teaching and non-teaching staff members for their patience and special consideration for the completion of our work. Lastly, we offer our regard for all those, in particular our parents and who supported us in any respect during this project work.

REFERENCES

[1] V. V. Tyagi, N. Rahim, N. a. Rahim, and J. Selvaraj, "Progress inSolar PV Technology: Research and Achievement," IEEE, Renewable and Sustainable Energy Reviews, vol. 20, pp. 443-461, Apr. 2013.

[2] M. Liserre, T. Sauter, and J. Y. Hung, "Future energy systems: Integrating renewable energy sources into the smart power grid through industrial electronics," IEEE Ind. Electron. Mag., vol. 4, no. 1, pp. 18-37, Mar.2010.

[3] S. Jain and V. Agarwal, "Comparison of the performance of Maximum Power Point Tracking schemes applied to single-stage grid-connected photovoltaic systems," IET Electr. Power Appl., vol. 1, no. 5, pp. 753-762, Sep. 2007.

[4] S. Alsadi and B. Alsayid, "Maximum power point tracking simulation for photovoltaic systems using perturb and observe algorithm," International Journl of Engg, 2012.

[5] Rana Ahmed, A.K. Abdelsalam, A. Namaan, Y.G. Dessouky, N.K. Mâ˜A ´ ZSirdi, "Improved Performance State-Flow Based Photovoltaic Maximum Power Point Tracking Technique," IEEE, Renewable Power Generation Conference (RPG 2014), 3rd, 24-25 Sept. 2014, pp. 1-5.

[6] T. Lopez and R. Elferich, "Quantification of power MOSFET losses in a synchronous buck converter," in Proc. IEEE Appl. Power Electron. Conf., 2007, pp. 1594-1600..

[7] "LC Selection Guide for the DC-DC Synchronous Buck Converter." Application note # AND9135/D. ON Semiconductor.

[8] Somali Surawdhaniwar and Mr. Rithes Diwan, "Study of Maximum Power Point Tracking using Perturb and Tracking method," International Journal of Advanced Research in Computer Engineering & Technology (IJARCET), Volume 1, Issue 5, July 2012.

[9] Ali Chermitti, Omar Boukli-Hacene, Bencherif Mohamed, "Improvement of the Perturb and Observe MPPT Algorithm in Photovoltaic System under Rapidly Changing Climatic Conditions," International Journal of Computer Applications (0975-8887), Volume 56- No.12, October 2012.