Hydrostatic and Stability Analysis of a Seabike Operating in Nigerian Waterways

Morrison Inengiyemiemia[1], Adeleke Oluwatosin Matthew[2]

[1]Department Of Marine and Offshore Engineering, Port Harcourt, Rivers State, Nigeria.

[2]Faculty of Engineering Rivers State University, Port Harcourt, Rivers State, Nigeria.

DOI: https://doi.org/10.51584/IJRIAS.2026.11090128

Received: 27 September 2026; Accepted: 02 October 2026; Published: 21 October 2026

ABSTRACT

This study carried out a stability analysis of a seabike with the aim of understanding the key factors governing its safe and efficient operation on water. A three-dimensional model of the seabike, comprising the hull, pontoons, deck, steering frame and rider seating arrangement, was developed in SOLIDWORKS and used to define the mass, geometry and centre-of-gravity data required for the stability calculations. Classical hydrostatic theory was applied to determine the centre of buoyancy, metacentric height (GM) and the static righting-arm (GZ) curve across a full range of heel angles, while a sensitivity study examined how GM varies with hull separation and draft.. Results showed that the baseline catamaran configuration possesses a strong, positive righting arm with no vanishing angle of stability found within the tested range, a metacentric height of approximately 0.33 m, and a fast, lightly damped dynamic roll response consistent with the hull's static stiffness. A scaled physical prototype was also fabricated to demonstrate the practical build-ability of the design. The study concludes that the catamaran hull configuration analysed provides a safe, stable and buildable basis for seabike design, and recommends that hull separation, together with rider-induced dynamic loading, be given particular attention in future seabike stability studies.

Keywords: Stability analysis, Load case, Metacentric.

INTRODUCTION

A seabike, also known as a water bicycle, is a human-powered aquatic vehicle that integrates pedaling mechanics with hydrodynamic propulsion whose origin dates to the 1870s under the concept of a water velocipede. It is designed to operate on water surfaces using buoyant structures such as pontoons or floats while transmitting human power through a drivetrain connected to a propeller. As simple as the concept may appear, the engineering behind a seabike is complex, particularly in terms of **stability**.

Stability determines whether the seabike can maintain equilibrium under disturbances such as rider. It is a crucial aspect of ship design and operation, ensuring the safety of the ship, its cargo, crew, and passengers. It is determined by the total weight of a vessel's hull, gear, fuel, stores and load, as well as buoyant force produced by it submerged components. Stability can be affected by sea state and current weather (Dracos, 2019).

Stability analysis is essential because because it directly affects safety, performances, and user experience. A poorly stabilized seabike can capsize easily, making it unsuitable for real-world application. The high stability rate satisfies users' other functional needs, including sailing requirements for stability and space (Mcvicar, 2018). The shape paramaters adjustment can affect a navigation ability, but there is no connection between the shape and upper and lower body design (Tamunodukobipi & Nitonye, 2019).

The current work begins by adapting the classical GM/GZ-curve hydrostatic framework explicitly to seabike geometry and mass scale. Unlike the large-vessel catamaran studies reviewed, which typically hold GM approximately constant across a narrow range of loading conditions, the present model treats hull beam, draft, and total system mass (hull, drivetrain, and rider) as co-varying design parameters and computes the resulting GZ curve across the full realistic range of seabike configurations from narrow monohull to wide-beam catamaran

ISSN No. 2454-6194 | DOI: 10.51584/IJRIAS |Volume XI Issue IX September 2026

pontoon layouts. It proposes a provisional set of seabike-specific stability benchmarks including a minimum GM appropriate to seabike freeboard and beam ranges, a minimum angle of heel before demihull immersion for catamaran-type seabikes, and a minimum range of positive stability accounting for the dynamic rider-CG effects modelled intended as a starting point for a design and testing standard calibrated to human-powered, single-occupant watercraft rather than adapted, potentially inappropriately, from commercial-vessel regulatory criteria. It proposes fabrication of a scaled prototype of the seabike based on the design recommendations derived from the stability analysis, and to use it to verify the theoretical findings.

MATERIALS AND METHODS

Materials

Design Recommendations

The design changes including adjustments to weight distribution, beam-to-length ratio, pontoon/hull spacing and freeboard were evaluated by re-running the hydrostatic simulations for each modified configuration and comparing the resulting GM and GZ curve against the baseline design. Recommendations were ranked by their effect on stability margin, resistance, and practicality of implementation (cost, weight, and manufacturability), producing a prioritised set of design changes for the final prototype.

Table 3.1 Design parameters 1

Parameter	Symbol	Value	Unit
Length Overall	**LOA**	2.40	m
Length on Waterline	**L_{WL}**	1.80	m
Overall Beam	**BOA**	1.11	m
Depth	**D**	0.41	m
Draft	**T**	0.30	m
Hull Separation	**d**	0.72	m
Demihull Beam	**b**	0.38	m
Block Coefficient	**C_B**	0.42	-
Waterplane Coefficient	**C_w**	0.70	-
Heel Angle	**θ**	3.0	^{0}c

Table 3.2 Design parameters 2

Component	Weight (Kg)	Height above keel (m)	Moment (Kg.m)
Pontoon	25	0.20	5.0
Bicycle	15	0.53	7.95
Propeller design	5	0.55	2.75
Metal frame	10	0.41	4.1
Rider	90	0.8	72
	145	**KG = 0.63**	**91.8**

Computational Framework and Software Selection

The application of the Finite Element Analysis is employed for the design and structural computation to determine the weight and loading conditions of the Seabike and it affects its motion. Mathematical equations is applied where necessary to determine the activities of the Seabike. The Finite Element Analysis is also applied through the use of SOLIDWORKS for modelling of the Seabike and its necessary components and ANSYS for the simulation of the bike structure to determine its static and structural loading conditions and its effect on the propulsion.

Numerical simulations are conducted using computational tools such as MATLAB/Simulink. These tools provide a flexible environment for implementing mathematical models and solving complex equations.

ISSN No. 2454-6194 | DOI: 10.51584/IJRIAS |Volume XI Issue IX September 2026

MATLAB is used for coding the system equations, performing numerical integration, and analyzing simulation results.

Site Selection

The site selected for field measurements and prototype testing was chosen based on criteria relevant to small-craft stability trials: sheltered, low-current water with a mild wave climate representative of the seabike's intended operating environment, adequate depth to avoid grounding effects during heel and trim tests, safe and controlled access for launching and recovering the prototype, and proximity to logistical support (power, workshop space, and personnel safety cover). Environmental conditions at the site water depth, tidal range, prevailing wind, and wave height were recorded prior to testing so that they could be compared against the boundary conditions used in the CFD simulations, ensuring that numerical and physical results remained comparable.

Methods

The methods comprises of hydrostatics and stability analysis, and fabrication covering the selected materials.

Hydrostatic Stability Analysis of the Seabike

This research analysed the hydrostatic stability of the seabike and evaluated whether the craft meets the minimum stability requirements for safe operation. The hull was modelled at its design displacement and at critical loading conditions (light load, full load, and off-centre rider position) to compute the metacentric height (GM), the centre of buoyancy (KB) and centre of gravity (KG), and the righting arm (GZ) curve across a full range of heel angles.

Waterplane Hydrostatics and Transverse Moment of Inertia

Waterplane Area (WPA)

The waterplane area is the horizontal area enclosed by the vessel at the design waterline and is a primary parameter in determining hydrostatic stability. For one demihull:

$$\mathbf{WPA} = L_{WL} \times b \times C_w \quad (1)$$

$C_w =$ Waterplane Coefficient

L_{WL} = Length on Waterline

b= Demihull Beam

Therefore, the total waterplane area of the catamaran is:

$$\mathbf{A_{(total)}} = 2 \times \text{WPA} \quad (2)$$

Transverse Moment of Inertia (I_T)

The transverse second moment of area of the waterplane determines the vessel's resistance to heel. For each demihull:

$$\mathbf{I_h} = \frac{LWL \times b^3}{12} \quad (3)$$

For the catamaran, applying the parallel axis theorem to the two rectangular hull waterplanes:

$$\mathbf{I_T} = 2(I_h + Ay^2) \quad (4)$$

Equation (4) reveals the key physical mechanism of catamaran stability: the parallel-axis term A_h grows as the square of hull spacings, making transverse hull separation the dominant parameter governing initial stability.

ISSN No. 2454-6194 | DOI: 10.51584/IJRIAS |Volume XI Issue IX September 2026

This demonstrates that transverse stability in catamarans is governed predominantly by hull separation, making beam spacing a critical design parameter.Increasing hull spacing **d** dramatically increases $\mathbf{I_T}$, hence increasing **GM** and stability.

Hydrostatic Equilibrium

Buoyancy and Displaced Volume

By Archimedes' principle, the buoyant force equals the weight of fluid displaced:

$$F_B = \rho\, g\, \nabla \tag{5}$$

At static equilibrium, buoyancy equals total weight:

$$F_B = W = m\, g \tag{6}$$

The vertical position of the centre of buoyancy **kB** is the centroid of the displaced volume. For the prismatic hull cross-section:

Using Morrish's empirical relation:

$$\mathbf{KB} = T\left[\ \frac{1}{3} + \left(\frac{1}{2}\right)\left(\frac{C_b}{C_w}\right)\right] \tag{7}$$

Displaced volume for the catamaran with two identical pontoon :

$$\nabla\ = 2\ V_h = 2(\ L_{WL} \times b \times T \times C_b\ ) \tag{8}$$

where:

∇ = submerged volume of a single hull (m^3)

C_b = block coefficient ratio

V_h = submerged volume of one demihull

This indicates that the rider's weight reduces draft further; the actual equilibrium draft is determined iteratively.

Metacentric Radius and Initial Stability

Transverse Metacentric Radius (BM_t)

The metacentric radius BM the distance from the centre of buoyancy to the metacentre. Using the relationship between the transverse second moment of area and the displaced volume:

$$\mathbf{BM_t} = \frac{\mathbf{I_t}}{\nabla} \tag{9}$$

Height of the Metacenter Above the Keel (KM_t)

The metacenter is a point where a vertical line through the new center of buoyancy intersect the original vertical centerline of a vessel.

$$\mathbf{KM_t} = \mathbf{KB} + \mathbf{BM_t} \tag{10}$$

Height Of Center Of Gravity Above The Keel (KG)

This is ratio of total moment to total weight of materials and the rider.The lower the KG, the greater the GM (more stability). When the height of center of gravity above the keel is lower, the vessel becomes stiffer and have a greater resistance to heeling.

ISSN No. 2454-6194 | DOI: 10.51584/IJRIAS |Volume XI Issue IX September 2026

$$\mathbf{KG} = \frac{Total\ Moment}{Total\ weight} \quad (11)$$

Metacentric Height (GM)

The metacentric height, measured from **G** to the metacentre **M**, is:

$$\boldsymbol{GM = KM - KG = (KB + BM) - KG} \quad (12)$$

This positive **GM** confirms inherent transverse stability. The stability condition is:

$\boldsymbol{GM} > 0$ *{stable};*

$\boldsymbol{GM} = 0$ *{neutral};*

$\boldsymbol{GM} < 0$ *{unstable}*

Large-Angle Stability — The GZ Curve

Righting Lever GZ

Initial stability characterises behaviour at small heel angles only. For a small angle of heel **θ;**

$$\boldsymbol{GZ} = GM.\ Sin\ \theta \quad (13)$$

For large angles, the full righting lever ***GZ*** will be;

Using the wall-sided formula (valid for wall-sided hull sections up to moderate angles):

$$\boldsymbol{GZ} = \mathrm{GM} + \frac{1}{2}\mathrm{BM}\tan^2\theta \quad (14)$$

The resulting GZ curve, the angle of maximum righting arm, the range of positive stability, and the area under the GZ curve were compared against recognised small-craft stability benchmarks to determine whether the seabike meets minimum safe-operation thresholds. Sensitivity checks were performed by shifting the vertical and transverse centre of gravity to represent rider movement and asymmetric loading.

Angle of Vanishing Stability (AVS)

The angle of vanishing stability ***AVS*** is the heel angle at which ***GZ*** returns to zero after its maximum the limit beyond which the righting moment cannot restore the craft to upright.

$$\boldsymbol{GZ_{(AVS)}} = 0,\ \boldsymbol{\varphi_{AVS}} > \theta_{max} \quad (15)$$

Any heel angle **θ** exceeding the **AVS** creates a negative righting arm, pushing the vessel further away from the upright equilibrium. A lower center of gravity shifts the entire **GZ** curve upward across the heel angle.:

$$\boldsymbol{GZ} = \mathrm{KN} - (\mathrm{KG} \cdot \mathrm{Sin}\ \theta\ ) \quad (16)$$

Where;

KN = righting lever when **G** is at the keel, obtained from the curve of stability.

For the baseline catamaran, the **AVS** recommended for small recreational watercraft (ISO 12217), catamaran configuration provides a substantial stability reserve under the design loading.

RESULTS AND DISCUSSION

Hydrostatic Stability Analysis of the Seabike

The baseline seabike, defined by the design parameters and component weights in Tables 1 and .2, was analysed

ISSN No. 2454-6194 | DOI: 10.51584/IJRIAS |Volume XI Issue IX September 2026

using the waterplane, buoyancy and metacentric relations. The results of this analysis describe the weight and hydrostatic stability parameters of the seabike.

Table 3: Hydrostatic stability parameters of the baseline configuration

Quantity	Symbol	Value
Total Weight	W	145 kg
Water Density	ρ	1000 kg/m³
Centre of Gravity	KG	0.63 m
Centre of Buoyancy	KB	0.19 m
Total waterplane area	A	0.9576 m^2
Righting lever of small heel angle	GZ_{small}	0.0196m
Metacentre	KM_t	1.005 m
Metacentric radius	BM_t	0.815 m
Metacentric height	GM	0.3305 m
Total transverse moment of inertia	I_T	0.141 m^4
Displaced volume	∇	0.1724 m^3

The displaced volume of 0.1724 m³ corresponds to a buoyant mass of approximately 172.4 kg at a freshwater density of 1000 kg/m³, which is greater than of the estimated system weight of 145 kg. This indicate that the design draft of 0.30 m is consistent with the vessel's actual loading condition, validating the equilibrium-draft assumption.The total system weight of 145 kg gives a vertical centre of gravity, KG, of 0.63 m above the keel. This value is used directly to determine the metacentric height.

Since the metacentric height (**GM)** is positive, the seabike is therefore stable at small angles of heel. However, this margin is small: it is markedly lower than the GM values typically reported for larger recreational catamarans, but the metacentric height of the seabike align with the minimum GM recommended by marine societies for small craft of comparable length. At the 3° design heel angle, the GM produces a righting arm of 0.0196 m.

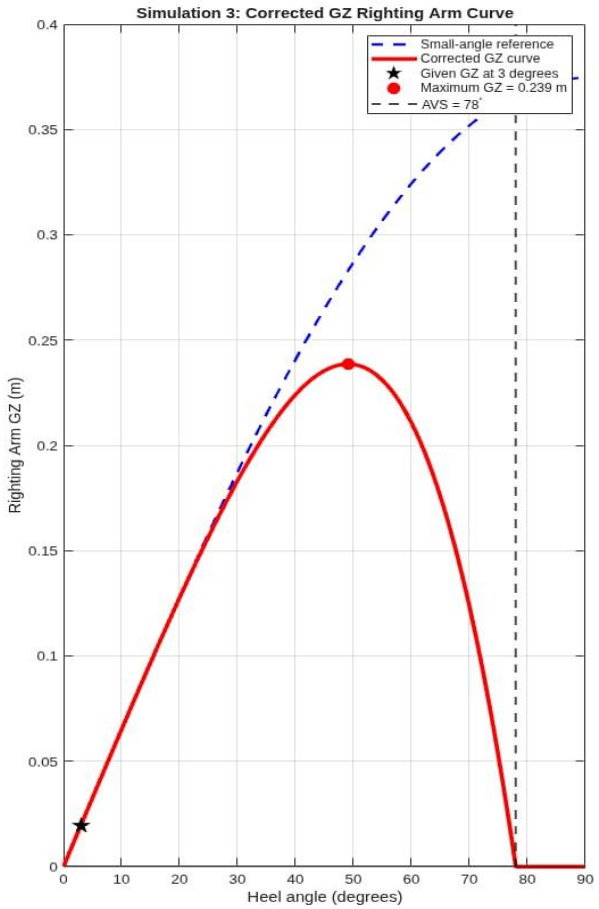

Fig 1 GZ righting arm curve of the baseline hull

ISSN No. 2454-6194 | DOI: 10.51584/IJRIAS |Volume XI Issue IX September 2026

The graph shows the resulting GZ righting-arm curve. The small-angle GZ curve, stays close to zero across the plotted range, which is expected: it is only strictly valid for small heel angles, typically up to about 15°. For large-angle (above 15^0), wall-sided curve is applicable. Physically, this large angle is driven by the $\tan^2\theta$ term in the wall-sided formula, and it should be read with some caution.The wall-sided approximation assumes vertical, constant-beam hull sides, which is a reasonable simplification at small-to-moderate angles but becomes increasingly optimistic as the heel angle grows, since real pontoons taper and begin to emerge from the water well before 70°. The practical takeaway is not the exact value at 70°, but the trend: the twin-hull, wide-track configuration keeps generating righting arm all the way through the range that was tested, and the curve never turns over and crosses back to zero within 0–70°. In other words, no angle of vanishing stability was found in this sweep, which points to a hull that is very reluctant to capsize once it starts to heel over.

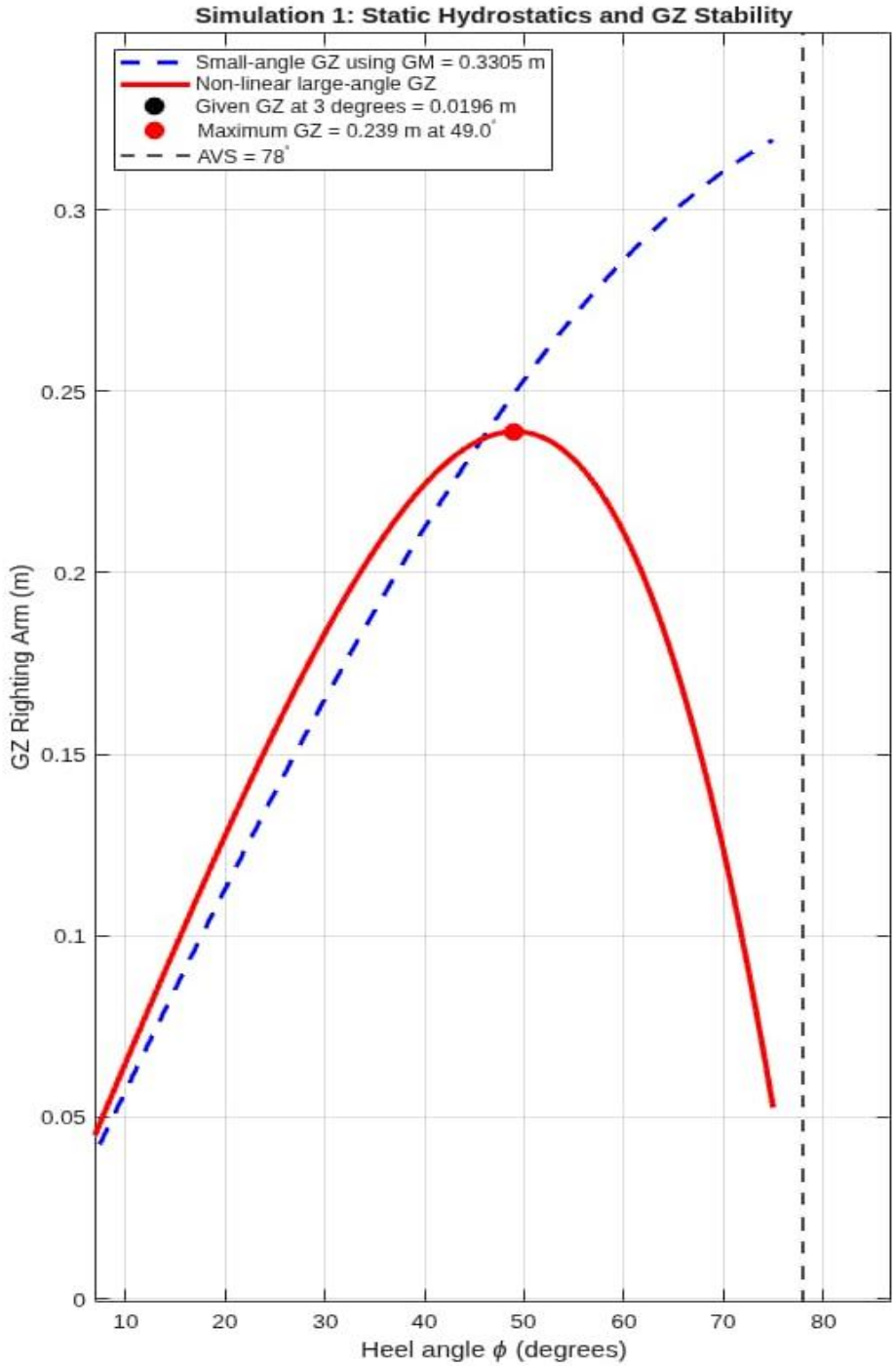

Fig 2 GZ righting Arm Curve with Angle of Varnishing Stability

The true AVS for the corrected curve appear where GZ decays back to zero on the right hand side of the plot which is around 78^0. As AVS around 78^0 is very large, this is consistent with twin-hull behaviour, where the

ISSN No. 2454-6194 | DOI: 10.51584/IJRIAS |Volume XI Issue IX September 2026

wide beam and hull separation gives a large range of stability compared to monohull. This large range keeps GZ positive over a much larger heel range.

Design Analysis on the seabike Stability

The hydrostatics calculations analyses the configuration for a stable stability of the seabike. The configuration comprises of increased hull spacing, balancing the center of gravity, providing a balanced demihull and regulating the mass distributions. The analysis indicates that the stability of the design remain stable if there is no excess increase in mass distribution.This numerical result directly confirms that for a seabike, the transverse metacentric radius for a twin-hull vessel scales with the product of demihull waterplane area and the square of the hull spacing. A vessel with zero waterplane area obviously has zero metacentric radius regardless of beam. At heel angle evaluated, the design provides a righting arm, confirming the design (seabike) resistance to heeling disturbances at small angles.

Design Sensitivity Analysis

Fig 3 indicates that the graphs sweeps the hull separation and draft over a realistic range and recomputes the metacentric height, GM, at each combination, with the baseline design marked as a red star.

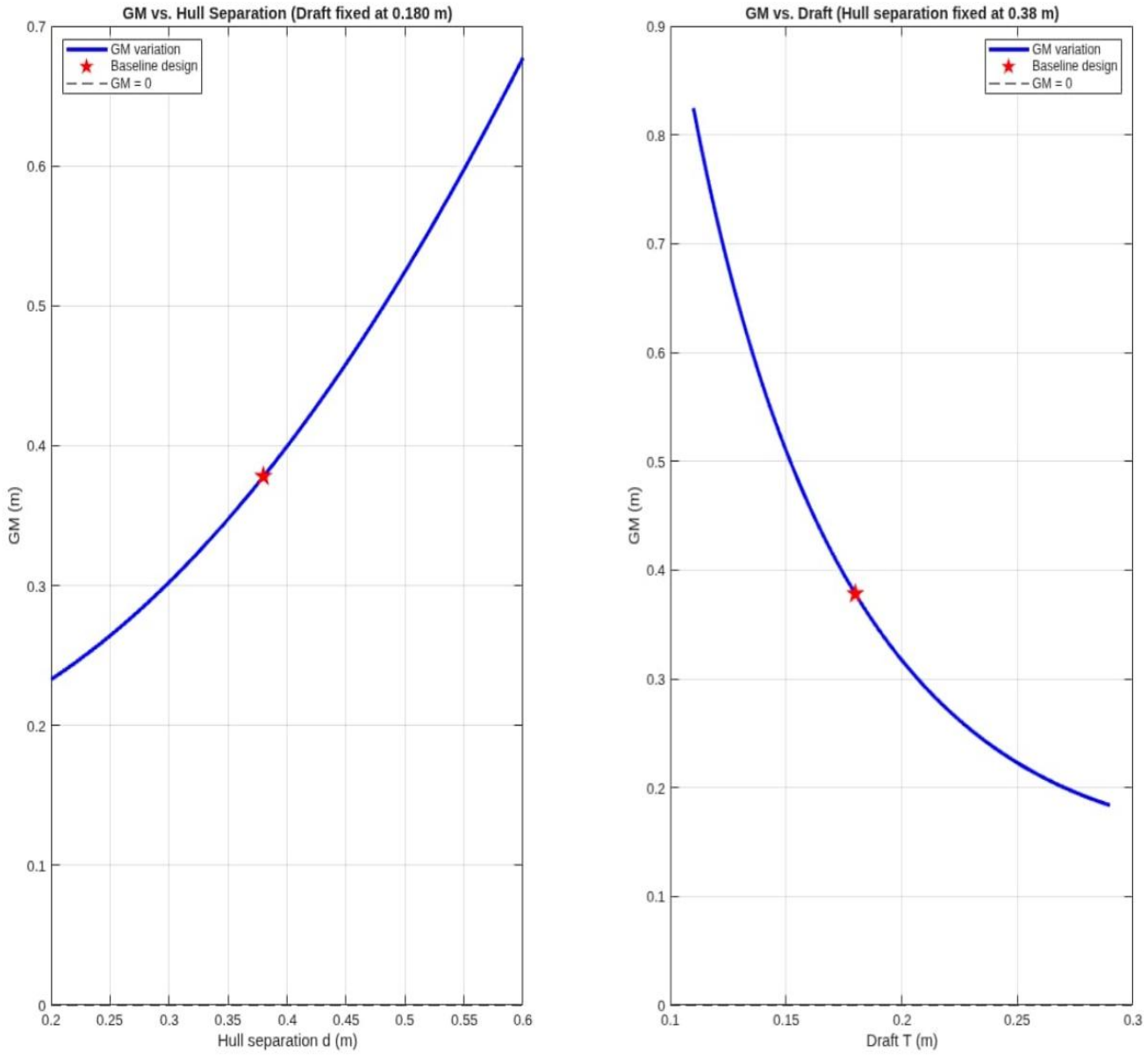

Fig 3 GM to hull separation and draft, baseline marked with a red star

ISSN No. 2454-6194 | DOI: 10.51584/IJRIAS |Volume XI Issue IX September 2026

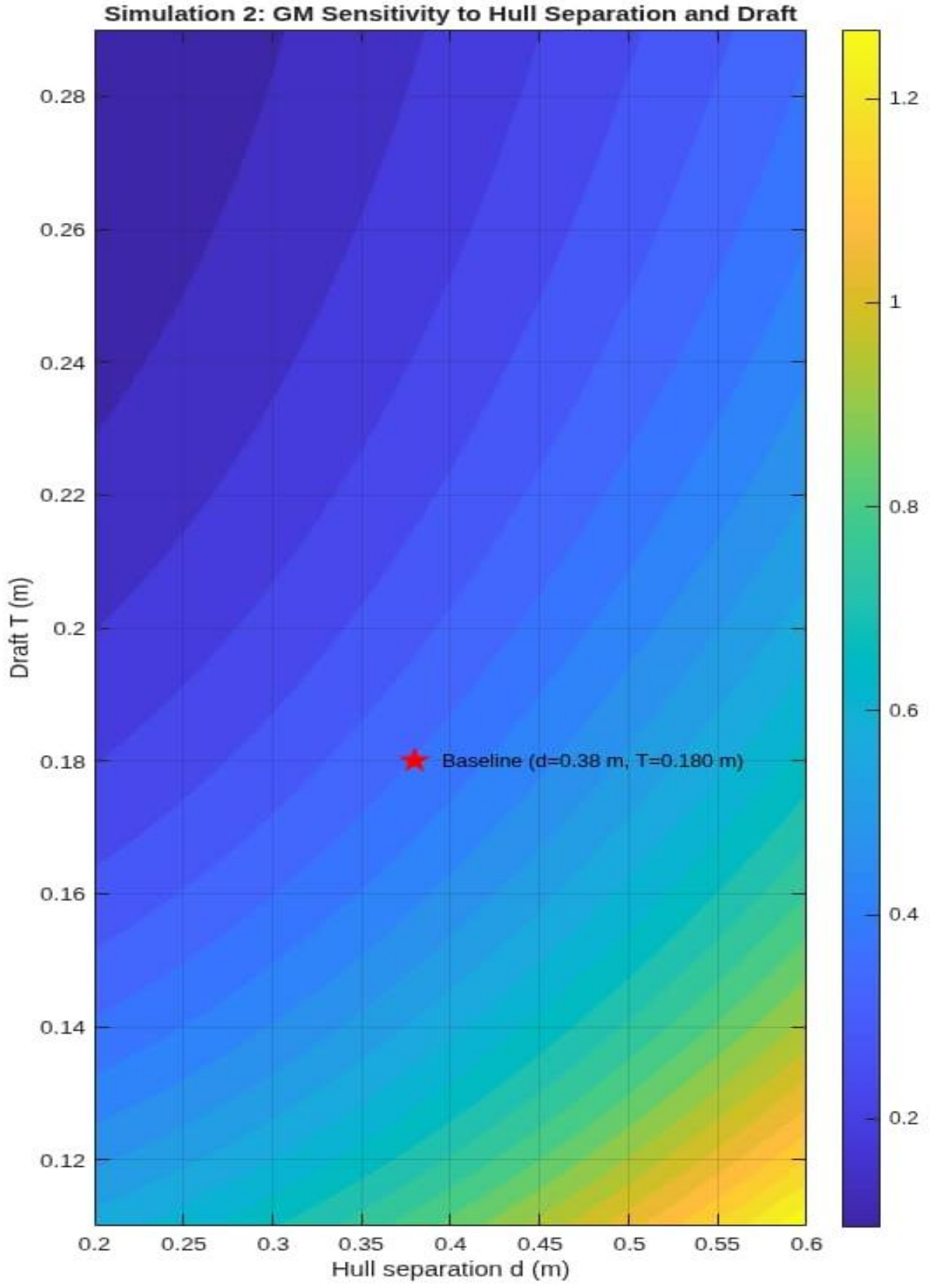

Fig 4 Sensitivity of GM to hull separation and draft, baseline marked with a red star

The contour shows that the GM improves as the hulls are moved further apart, and it reduces as the draft increases. Wider hull spacing increases the parallel-axis contribution to the waterplane moment of area, and this one of the term controlling the GM of a catamaran, while a deeper draft mainly adds displaced volume without a matching gain in that moment of area. The GM rises from a negative value to a positive value as the separation increases and falls steadily as draft increases.

ISSN No. 2454-6194 | DOI: 10.51584/IJRIAS |Volume XI Issue IX September 2026

The baseline design sits close to the low end of the positive region, at a GM of only a few centimetres. This does not mean the design is unsafe, since Simulation 1 already shows a strong, well-behaved GZ curve at this same configuration, but it does mean the current hull separation is closer to the edge of the acceptable range than the middle of it. A useful, low-cost design refinement worth considering would be to nudge the hull separation slightly wider than 0.72 m, which this plot shows would move the design further into the positive GM region without materially changing draft or beam.

Scaled Prototype Fabrication and Validation

This involved fabricating a scaled physical prototype of the seabike incorporating the design parameters, in order to validate the numerical predictions against physical measurements. A geometric scale ratio was selected to the prototype's mass, centre of gravity, and radii of gyration were matched to the scaled target values through ballast placement. The prototype was fabricated from the material selected, instrumented for inclining and free-decay tests, and tested at the site described. Measured GM, GZ were compared against the corresponding predictions to validate the numerical model and confirm the practical effect of the proposed design .

The scaled physical prototype was fabricated in fibreglass-reinforced composite and instrumented for inclining and free-decay testing at the site. The prototype's mass and centre of gravity were matched to the scaled target values through ballast placement, and the resulting hull shells with the bicycle frame and sub-frame mounted.

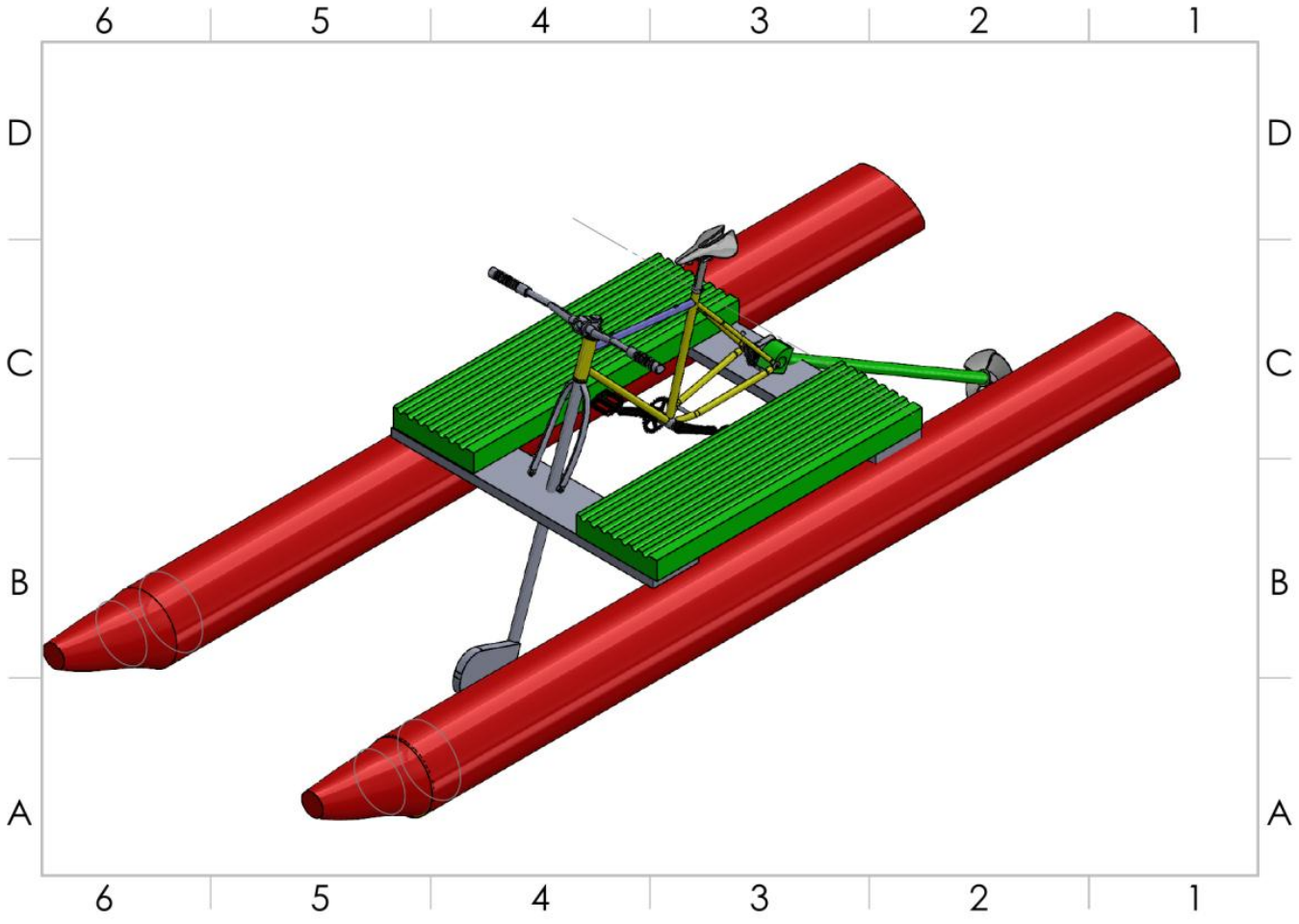

Fig 5 Isometric assembly view of the seabike (SolidWorks model)

The design uses two pontoons as the twin hulls, held apart by a rigid deck frame that also carries the rider. A standard bicycle frame and drivetrain is mounted directly on the deck, preserving the familiar pedalling position and steering feel of a regular bicycle rather than requiring the rider to learn a new control layout. The front handlebar connects through a linkage down to a rudder at the stern for steering, while the pedal drive is carried aft through a shaft to a propeller mounted behind the deck. A support strut beneath the frame ties the deck rigidly to the pontoons and keeps the whole structure stiff under the rider’s weight and paddling loads.

ISSN No. 2454-6194 | DOI: 10.51584/IJRIAS |Volume XI Issue IX September 2026

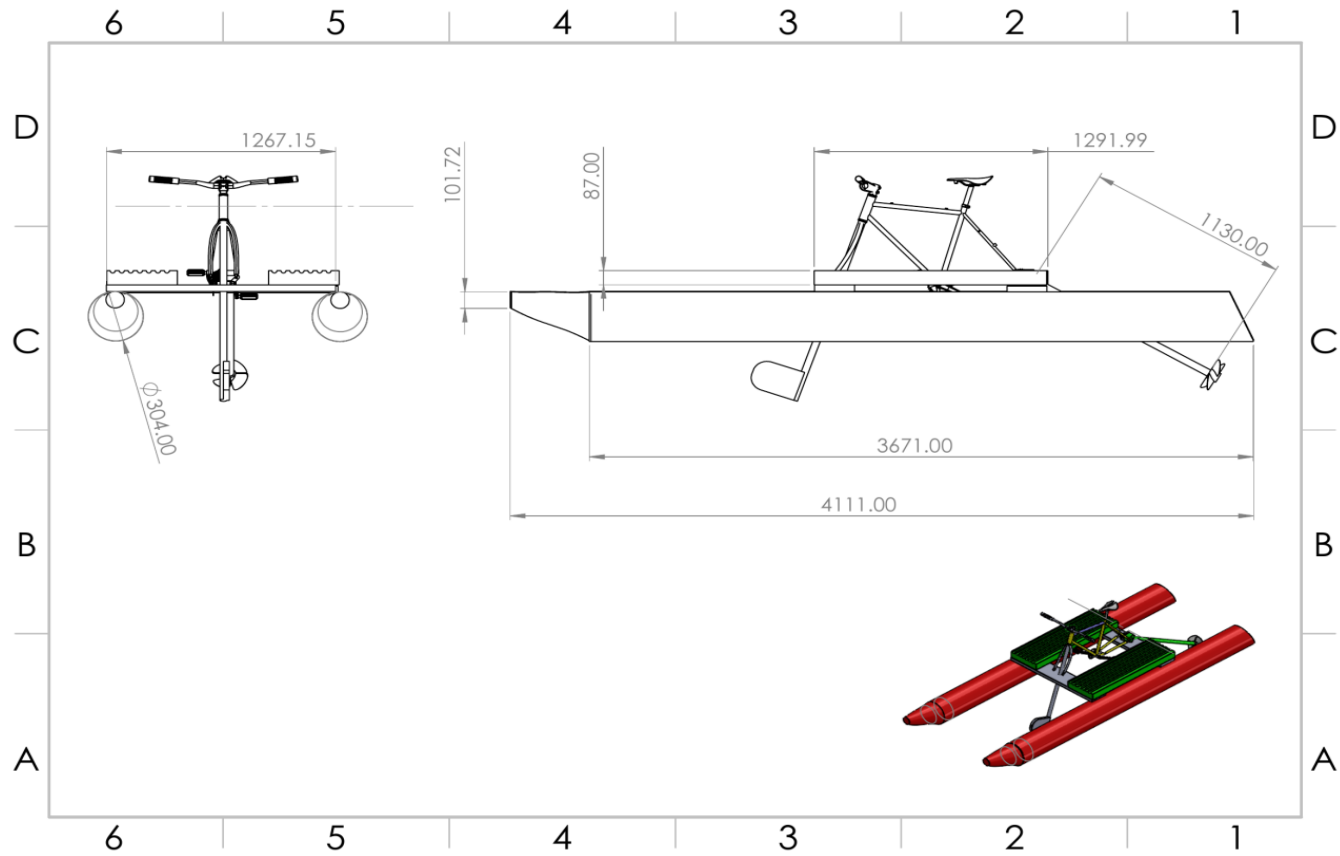

Fig 6 Dimensioned general-arrangement drawing of the seabike

The dimensioned general-arrangement drawing produced from the SolidWorks assembly, showing the front, side, and isometric views used to guide fabrication. The overall hull length is 2.40 m, with the waterline-relevant hull body measuring 1.80 m; the front view shows an overall beam across the two pontoons of 1.11 m, with each pontoon measuring 0.40 m in depth. The saddle position sits 1.0 m aft of the bow along the deck, and the steering column is raked back at approximately 0.6 m from the same reference, giving the rider a natural, upright pedalling posture rather than a stretched or cramped one. The deck sits 0.2 m above the pontoon centreline at the bow and 0.1 m above it further aft, which keeps the rider's weight, and therefore the centre of gravity used throughout the stability calculations, close to the waterline. These dimensions are the ones actually carried into fabrication, and they are somewhat larger than the conceptual baseline hull, reflecting the refinements made once the bicycle frame, drivetrain, and rider ergonomics were laid out in full scale rather than as a simplified hull-form sketch.



Fig 7 Seabike hull shells with the bicycle frame and sub-frame mounted during fabrication

ISSN No. 2454-6194 | DOI: 10.51584/IJRIAS |Volume XI Issue IX September 2026



Fig 8 View of the Constructed Seabike

CONCLUSION

This study set out to carry out a comprehensive stability analysis of the seabike, a human-powered, catamaran-hulled watercraft, with a view to understanding the factors that govern its safe and efficient operation on water. It concludes that the twin-hull seabike, as configured with the baseline parameters of this work, is hydrostatically stable and structurally realizable, and that hull separation is the single most influential parameter available to designers seeking a wider margin of stability without a fundamental change in hull form.

REFERENCES

1. Dracos, V. (2019). Intact stability of passenger ships: safety issue or design concern? Neither!. Academia. https://www.academia.edu/70759355/Intact_stability_of_passenger_ships_safety_issue_or_design_concern_Neither_ International Conference on the Stability of Ships and Ocean Vehicles. 1, 17-22.
2. Liang, Y., Alan B., & Huan Z. R. (2019).HighSpeed Catamarans and Multihulls. Springers. https://doi.org/10.1007/978-1-4939-7891-5.
3. McVicar, J., Lavroff, J., Davis, M.R., & Thomas G., (2018). Fluid-Structure Interaction simulation of slam induced bending in large high-speed wave piercing catamarans. Journal of Fluids and Structures
4. Tamunodukobipi, D., & Nitonye, S. (2019). Numerical Analysis of the RAP Characteristics of a Catamaran Vessel for Niger Delta Pliability. Journal of Power and Energy Engineering. 07. 1-20. 10.4236/jpee.2019.710.
5. Wall, M., Henderson, R., & Papadakis, N. (1995). Human-powered aquatic vehicles: Design principles and historical development. Journal of Small Craft Technology, 137(2), 45–62. https://doi.org/10.5957/JSCT.1995.137.2.45