# Real-Time Environmental Monitoring of a Community-Scale Waste Incinerator Using an Iot-Enabled Multi-Sensor System

**Aam Amaningsih Jumhur[1], Kevin Abdilah[2]**

**Departement Mechanical Engineering Education, Faculty of Engineering, Universitas Negeri Jakarta**

**DOI: https://doi.org/10.51584/IJRIAS.2026.11SP140021**

**Received: 09 November 2026; Accepted: 14 November 2026; Published: 27 November 2026**

## ABSTRACT

Community-scale incinerators require continuous environmental surveillance because combustion conditions and gaseous emissions vary rapidly. This study developed an IoT-enabled multi-sensor platform integrating an ESP32, K-type thermocouple/MAX6675, MQ-7, MQ-135, and MQ-136 sensors with ThingSpeak Cloud. A passive bypass reduced gas-sensor exposure to approximately 38–41 °C while chamber temperature reached 770 °C. Four field trials demonstrated synchronized thermal and gas-response monitoring and remote visualization. The platform is suitable for operational trend monitoring rather than regulatory emissions compliance because the MQ-series channels require reference-instrument validation.

## ABSTRAK

Insinerator skala komunitas memerlukan pemantauan lingkungan kontinu karena kondisi pembakaran dan respons gas berubah cepat. Penelitian ini mengembangkan sistem multi-sensor berbasis IoT yang mengintegrasikan ESP32, termokopel tipe-K/MAX6675, sensor MQ-7, MQ-135, dan MQ-136 dengan ThingSpeak Cloud. Saluran bypass pasif menurunkan paparan suhu sensor gas menjadi sekitar 38–41 °C ketika suhu ruang bakar mencapai 770 °C. Empat uji lapangan menunjukkan pemantauan termal dan respons gas secara tersinkron serta visualisasi jarak jauh. Sistem ditujukan untuk pemantauan tren operasional, bukan pengukuran emisi regulatori, karena kanal MQ memerlukan validasi terhadap instrumen acuan.

**Keywords:** community-scale incinerator, environmental monitoring, Internet of Things, flue-gas indicator, real-time monitoring

## INTRODUCTION

Decentralized waste treatment is increasingly considered where municipal collection, transport, and final-disposal infrastructure cannot fully accommodate local waste generation. Community-scale incinerators can reduce waste volume close to the source, but poorly monitored combustion may transfer environmental pressure from accumulated solid waste to inadequately characterized air emissions. For this reason, the environmental performance of small incinerators depends not only on furnace design but also on the availability of process information that allows operators to recognize unstable combustion, compare operating cycles, and document emission-related trends.

A major limitation of small incinerators is the scarcity of continuous environmental instrumentation. Industrial facilities typically use temperature probes, process-control systems, and dedicated gas analyzers, whereas community units may still depend on visual observation of flame and smoke. Such observation is intermittent, subjective, difficult to archive, and unable to describe rapid changes across ignition, active combustion, and burnout. Continuous monitoring is therefore relevant as an environmental information function: it provides a time-resolved record of thermal conditions and gas-sensor responses that can support operational diagnosis and more responsible waste-treatment practice.

Internet of Things (IoT) technology provides a practical pathway for converting these environmental variables into an accessible digital record. Across industrial domains, IIoT systems combine sensing, embedded processing, wireless communication, and Cloud services to improve process visibility and decision-making (Borgosz & Dikicioglu, 2024; Gunasekaran et al., 2023; Rana et al., 2024). Related studies have demonstrated IoT-based air-quality monitoring, incinerator-temperature monitoring, and remote incinerator interfaces (Dhiya'ulhaq et al., 2024; Arkhan & Elsi, 2024; Sarosa et al., 2025; Srinivasan et al., 2025). However, community incinerators impose additional environmental and engineering constraints because a useful system must operate near high temperatures while remaining affordable and maintainable.

However, transferring IIoT principles into resource-constrained settings is not simply a matter of adding wireless connectivity. Studies of industrial digitalization and IIoT adoption in small and medium enterprises identify implementation barriers associated with resources, technical capability, organizational readiness, and infrastructure, while also recognizing the value of real-time information for productivity and quality improvement (Shah et al., 2024; Kumar et al., 2025). These considerations are relevant to community incinerators, where a monitoring platform must be inexpensive, understandable, maintainable, and tolerant of imperfect field conditions. The design objective is therefore not maximal technological complexity, but sufficient instrumentation to transform an opaque combustion process into an observable one.

The broader process-engineering literature also shows why such observability matters. Real-time decision-support research emphasizes acquisition, integration, and preprocessing of sensor data as prerequisites for meaningful process decisions, while online-monitoring studies show how continuous data can reduce dependence on operator experience and support diagnosis of changing system states (Hameed et al., 2025; Tiwari et al., 2025; Wang et al., 2024; Zheng et al., 2025). Digital quality and predictive-maintenance approaches further reinforce the role of time-resolved operational data in moving from reactive observation toward condition-aware maintenance and intervention (Patel, 2025; Malomane et al., 2025). Accordingly, the present study treats Cloud visualization not as an optional display feature but as part of the measurement chain that preserves temporal context.

The most important engineering constraint is the thermal mismatch between the incinerator and low-cost semiconductor gas sensors. Combustion chambers and stack gases can reach temperatures far above the allowable operating range of MQ-series modules. Direct installation in the hot-gas path can therefore damage the sensors or distort their response. A field-appropriate environmental monitoring architecture must separate vulnerable gas-sensing elements from the severe thermal zone while maintaining exposure to a sampled gas stream. It must also integrate heterogeneous signals, stable power distribution, calibration routines, wireless communication, and Cloud visualization as one measurement chain rather than as isolated components.

The communication and data layers introduce another set of constraints. Wireless sensor systems must maintain connectivity and network longevity in dynamic industrial environments (Ramkumar et al., 2025), while modern industrial architectures face interoperability and data-integration challenges across heterogeneous devices and protocols (Luis et al., 2025). Because remotely connected sensing systems are cyber-physical systems, communication security and resilience also become relevant design considerations, particularly as systems evolve from passive monitoring toward automated control (El-Kady et al., 2023; Cao et al., 2025; Vidyakant Jha & Appasani, 2024). The present prototype does not implement an industrial cybersecurity stack, but these issues define requirements for later deployment.

The low-cost nature of MQ-series sensors also requires careful interpretation. These semiconductor devices are useful for detecting changes in gas environments but are affected by cross-sensitivity, baseline drift, temperature, humidity, and calibration strategy. Bangkit Sanjaya Umbu (2023) specifically discusses the sensitivity relationship of MQ-135 through Rs/R0-based interpretation, while Wibisono et al. (2024) demonstrate the practical use of MQ-7 and MQ-135 in an engine-emission monitoring context. These studies support the feasibility of low-cost semiconductor sensing but do not remove the need for application-specific calibration. In particular, MQ-135 is a multigas sensor rather than a selective NOx analyzer; accordingly, the NOx-related output in this work is treated as an indicative response, not as a reference-grade or regulatory measurement.

The resulting research gap lies at the intersection of environmental engineering and low-cost digital monitoring. Existing IoT studies demonstrate the feasibility of remote sensing, while smart-manufacturing research increasingly links sensor data to anomaly detection and adaptive decision support (Ou et al., 2025; Gunasegaram et al., 2024; Zhang et al., 2025). Yet community incinerators require a field-demonstrated architecture that simultaneously addresses high-temperature measurement, protected low-cost gas sensing, embedded acquisition, Cloud-based environmental information, and practical maintainability. This study therefore aimed to design and functionally evaluate an IoT-enabled multi-sensor system for real-time thermal and flue-gas surveillance of a twin-chamber community incinerator. The study asks whether the integrated platform can acquire the available sensor channels during real combustion, maintain the gas-sensor station within a thermally acceptable range, and provide continuous remote visualization. The system is evaluated as an operational environmental-monitoring tool rather than a regulatory continuous-emission-monitoring system.

# MATERIALS AND METHODS

### Experimental site and community incinerator

The system was implemented at Bank Sampah Mutiara, Bekasi, West Java, Indonesia. The experimental object was a community-scale twin-chamber incinerator designed for household waste. The experimental unit had a nominal burning capacity of 30–50 kg $h^{-1}$, external dimensions of approximately 1010 mm in width, 1450 mm in length, and 1385 mm in height, and a total mass of approximately 1000 kg. The baseline combustion arrangement used natural airflow, although later commissioning trials included forced-air operation. The monitored waste stream included household materials such as food residue, leaves, twigs, tissues, paper, cardboard, pieces of wood, and selected PP and PE plastics. Because the present article focuses on the monitoring architecture, these combustion trials are used primarily as dynamic validation environments rather than as replicated treatment comparisons. Community-oriented incinerator designs have been reported as practical waste-reduction technologies when engineering choices are adapted to local operation and maintainability (Fadillah et al., 2025).

**Table 1. Main characteristics of the incinerator and monitoring hardware.**

| Component | Specification / role | Interface |
|---|---|---|
| Incinerator | Twin chamber; 30–50 kg $h^{-1}$; 1010 × 1450 × 1385 mm | Process unit |
| Temperature | K-type thermocouple + MAX6675; up to ~1200 °C | SPI to ESP32 |
| CO channel | MQ-7 semiconductor sensor | ADC GPIO 32 |
| NOx-indicative channel | MQ-135 multigas semiconductor sensor | ADC GPIO 34 |
| $SO_2$ channel | MQ-136 semiconductor sensor | ADC GPIO 35 |
| Controller | ESP32 with integrated Wi-Fi | Embedded node |
| Cloud platform | ThingSpeak | HTTP / Wi-Fi |

### System architecture

The monitoring chain was organized into four functional layers: perception, embedded processing, network communication, and application. The perception layer consisted of one high-temperature measurement channel and three gas-sensing channels. The embedded layer used an ESP32 microcontroller and an expansion shield for power distribution and practical wiring. The network layer used the ESP32 integrated 2.4 GHz Wi-Fi capability and HTTP-based communication. At the application layer, ThingSpeak received, stored, and displayed the measurement streams. Figure 1 summarizes the architecture. This layered arrangement allowed thermal and gas measurements to be captured locally while separating the user interface from the harsh incinerator environment.

**Figure 1. System-level architecture of the proposed IoT monitoring platform.**

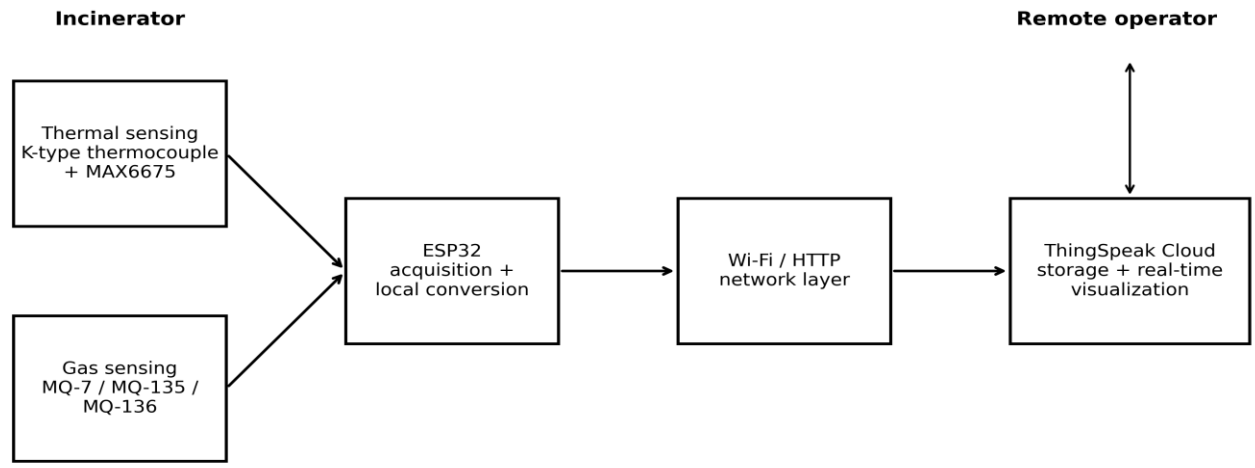


## Temperature measurement

Combustion-chamber temperature was measured using a K-type thermocouple coupled to a MAX6675 interface module. The thermocouple specified in the underlying study has a working range extending to approximately 1200 °C, making it appropriate for direct exposure to the combustion environment. The MAX6675 digitized the thermoelectric signal and communicated with the ESP32 through a serial peripheral interface. The combustion-chamber channel used GPIO 19 for data output, GPIO 18 for serial clock, and GPIO 5 for chip select, with 3.3 V and ground supplied through the expansion arrangement. Positioning the thermocouple in the chamber allowed the system to follow the entire thermal trajectory from ambient conditions through ignition, active burning, and cooling.

## Gas sensing and signal conversion

Three MQ-series semiconductor sensors provided low-cost gas-response channels. MQ-7 was used for CO estimation, MQ-135 was configured as a NOx-indicative channel, and MQ-136 was used for $SO_2$ estimation. Analog outputs were connected to ESP32 ADC-capable pins GPIO 32, 34, and 35, respectively. The MQ modules required 5 V supply to energize their internal heaters. Power was therefore distributed through the expansion shield rather than relying on a loosely assembled breadboard connection. The hardware refinement was important because unstable power and temporary connections were identified during early commissioning as potential contributors to inconsistent sensor behavior.

For MQ-7 and MQ-135, the firmware implemented resistance-ratio calibration based on clean-air baselines. The code included in the underlying study used clean-air ratio targets of 25.75 for MQ-7 and 3.6 for MQ-135. One hundred ADC readings were averaged during the baseline routine, after which the sensor resistance in clean air was used to estimate R0. Gas responses were then calculated using power-law curve-fitting expressions of the general form ppm = a(Rs/R0)^b, with coefficients encoded in the firmware. MQ-136 was treated differently: the underlying study adopted a direct voltage-to-concentration relationship from a previously reported comparison against a gas analyzer rather than an Rs/R0 baseline routine. Because this calibration was not independently recreated with certified gas standards in the present experiments, the resulting values are interpreted as sensor-estimated concentrations suitable for trend monitoring. The resistance-ratio approach follows the type of Rs/R0 interpretation discussed for MQ-135 by Bangkit Sanjaya Umbu (2023); however, the resulting values remain sensor estimates because no certified gas-standard calibration was performed on the exact field sensors.

## Thermal protection and flue-gas sampling

A central design problem was the low allowable operating temperature of the MQ modules compared with stack-gas temperature. The implemented solution was a small bypass sampling path connected to the chimney. Only part of the flue gas entered the sampling line. Heat was rejected passively along the pipe before the sample reached the gas-sensor chamber, reducing the temperature without an active refrigeration unit. During operation, the field records show approximately 38–41 °C at the gas-sensor location. This value is technically significant because it falls within, or close to, the stated working ranges of the selected MQ modules and is far below the direct stack temperature. Figure 2 illustrates the concept. The sampling approach therefore served simultaneously as thermal protection and as a means of providing a continuous gas stream to the sensors.

**Figure 2. Flue-gas bypass and passive thermal-conditioning concept used to protect the MQ sensor station.**

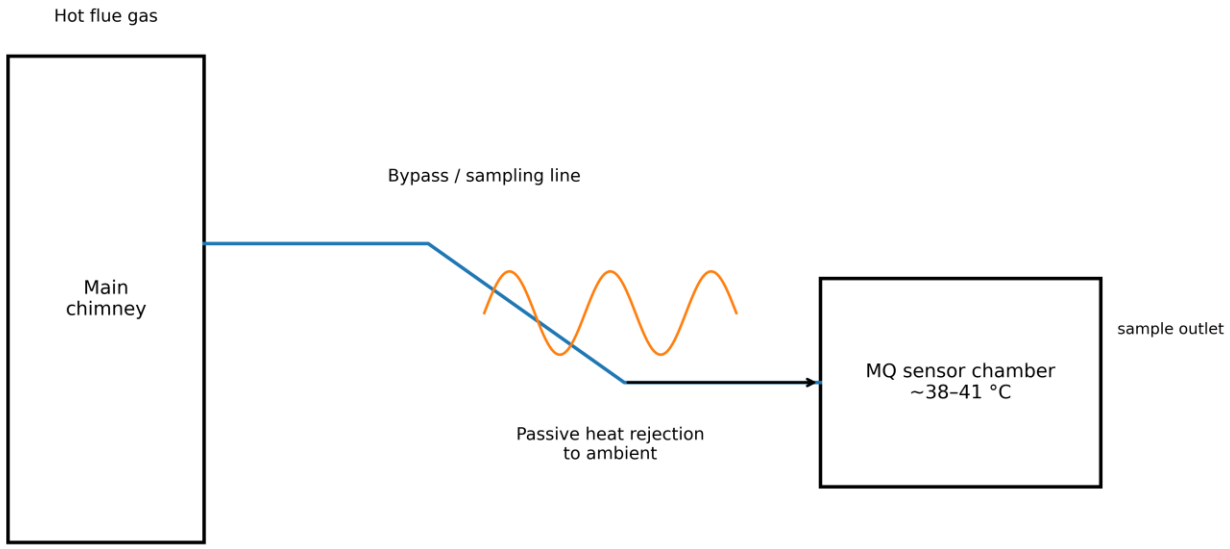


## Embedded software and Cloud transmission

Firmware was developed in the Arduino IDE using C/C++. The code initialized the Wi-Fi connection, sensor libraries, calibration parameters, and ThingSpeak communication. MAX6675 output was read digitally, while the gas channels were sampled through the ESP32 ADC. The resulting values were mapped to dedicated ThingSpeak fields and transmitted using the channel identifier and write API key. The Cloud layer provided two functions relevant to this investigation: time-stamped storage and remote real-time visualization. A web dashboard allowed an operator to inspect temperature and gas-response trends from an internet-connected computer or mobile device. The choice of ThingSpeak also follows established use of Cloud dashboards for time-stamped IoT data storage and visualization in environmental monitoring applications (Ferdian Hutabarat et al., 2023; The MathWorks, Inc., 2025).

## Field validation procedure

Functional validation used four incinerator trials conducted on 24 April, 7 May, 10 May, and 14 May 2026. The first three trials used 20 kg waste charges; the fourth used 30 kg. The first two experiments relied on natural draft, whereas the third and fourth included a blower. These differences are not treated as controlled experimental factors in this article; rather, they are useful because they exposed the sensing system to a wide dynamic range and to different transient patterns. Each trial was followed from pre-combustion conditions through active combustion and cooling. The experimental records provide periodic summary readings, while the appendix contains denser Cloud records. The second trial did not report MQ-136/$SO_2$ data because that channel was being evaluated and recalibrated, a commissioning limitation that is retained transparently in the present analysis. The use of direct combustion trials is consistent with the practical engineering emphasis of prior incinerator research

cited in the manuscript, in which operating behavior is evaluated under actual or pilot burning conditions (Aji & Wardhani, 2024).

### Data analysis

The evaluation focused on measurement coverage, dynamic-range response, thermal suitability of sensor placement, commissioning stability, and Cloud-data continuity. Descriptive summaries were calculated from the periodic readings reported in the underlying study, including observed ranges and peak values for each trial. No inferential hypothesis testing was used because the four burns were commissioning trials rather than independently randomized and replicated experiments. Similarly, no quantitative packet-loss rate, latency distribution, uncertainty budget, RMSE, or sensor accuracy statistic is reported because the underlying study did not include a synchronized reference-data set sufficient to support those metrics. This conservative analytical choice avoids assigning metrological performance that was not directly measured.

## RESULTS

### Integrated monitoring node

The completed system successfully combined dissimilar measurement channels on a single ESP32 node. The thermocouple/MAX6675 channel provided digital high-temperature measurement, whereas the MQ-7, MQ-135, and MQ-136 modules supplied analog signals through separate ADC inputs. The expansion shield simplified the distribution of supply voltage and ground and provided a more stable physical interface than the initial breadboard-style arrangement. The final configuration allowed the firmware to process all available channels within one acquisition cycle and transmit them to the same Cloud channel, preserving temporal context across parameters.

### Thermal suitability of the gas-sensor location

The bypass arrangement achieved the most direct engineering requirement of the design: reducing the thermal exposure of the MQ modules. The reported temperature at the sensor location was approximately 38–41 °C during stack sampling. In contrast, combustion-chamber temperatures during field trials reached several hundred degrees Celsius and peaked at 770 °C in the fourth trial. Direct placement of the MQ modules in the main hot-gas path would therefore have violated their intended operating environment. The passive line provided a simple thermal interface without a powered cooler and enabled continued gas-response measurement during combustion.

#### Multi-trial thermal response

Figure 3 shows the periodic combustion-chamber readings from all four validation trials. The system captured both low-temperature pre-combustion conditions and rapid excursions during active burning. Trial 1 increased from 34 °C to 581 °C; Trial 2 from 36 °C to 520 °C; Trial 3 from 37 °C to 709 °C; and Trial 4 from 32 °C to 770 °C. These trajectories demonstrate that the temperature channel retained a useful dynamic range across qualitatively different operating states. For the monitoring-architecture objective, the important result is not the thermal comparison between trials, but the fact that the same acquisition chain followed large and rapidly changing thermal signals without requiring sensor substitution.

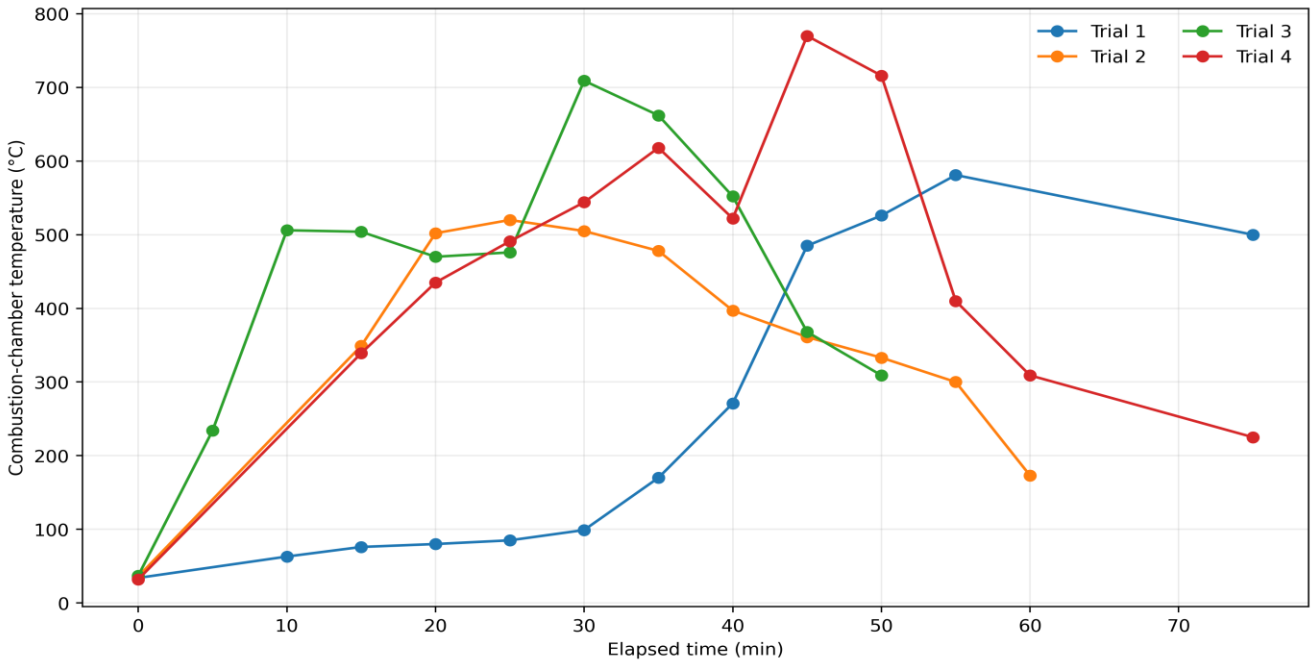


**Figure 3. Combustion-chamber temperature trajectories recorded during the four field validation trials.**

## Gas-sensor response and commissioning behavior

The gas channels likewise responded to changing combustion conditions. In Trial 1, periodic CO readings ranged from 20 to 140 ppm, the NOx-indicative response from 4 to 35 ppm, and the $SO_2$ estimate from 0.4 to 16 ppm. Trial 2 produced much higher CO estimates, reaching 441 ppm, while the MQ-136 channel was withheld because recalibration was still in progress. Trial 3 provided the largest transient responses in the summarized data: CO reached 781 ppm, the NOx-indicative channel 97 ppm, and $SO_2$ 95 ppm. By Trial 4, the multi-channel system produced comparatively coherent temporal profiles while the chamber reached 770 °C; Figure 4 displays the corresponding gas-response trajectories. These differences demonstrate that the sensors were not merely producing fixed baseline values but were sensitive to major changes in the sampled combustion environment.

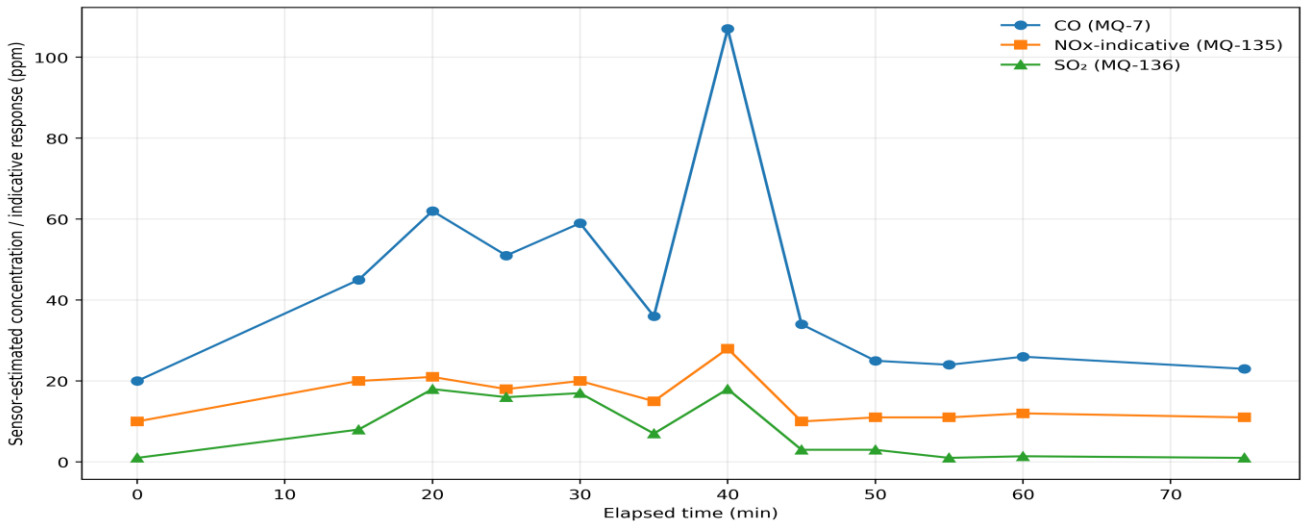


**Figure 4. Representative multi-gas response during the fourth field trial after commissioning refinements.**

The commissioning sequence also revealed practical weaknesses that informed the final configuration. The field records attribute early inconsistency partly to the initial hardware arrangement and to the need to refine sensor calibration. The second trial explicitly omitted MQ-136 results while that sensor was being evaluated. After the hardware and calibration adjustments, the third trial was described as producing more consistent sensor

responses and stable real-time transfer to ThingSpeak. This iterative improvement is an important result because low-cost monitoring systems are often limited less by nominal sensor specifications than by power distribution, baseline setting, physical placement, and signal conditioning.

### Cloud visualization

The ThingSpeak dashboard displayed the measurement fields as time series and stored the data for subsequent review. The experimental unit had successful real-time acquisition, transfer, and visualization, and describes the third field trial as proceeding without communication problems during the test period. The interface made the system accessible without requiring the operator to remain beside the incinerator or manually transcribe readings. In practical terms, the Cloud layer transformed the sensing node from a local instrument into a remotely viewable operational record. Because the study did not conduct a formal network stress test, this result should be interpreted as demonstrated field functionality rather than a quantified service-level reliability claim.

### Descriptive validation summary

Table 2 summarizes the four field trials. Across the complete commissioning sequence, the temperature channel covered approximately 32–770 °C. The periodic CO summaries covered 16–781 ppm, while the NOx-indicative and $SO_2$ channels also showed large transient ranges when available. The deliberate omission of Trial 2 $SO_2$ is retained to avoid suggesting complete channel coverage where calibration was not considered adequate. Taken together, the results show functional multi-sensor integration across a dynamic environment, thermal protection of the low-cost gas modules, and remote data availability.

**Table 2. Descriptive summary of the four commissioning/field-validation trials.**

| Parameter | Trial 1 | Trial 2 | Trial 3 | Trial 4 |
|---|---|---|---|---|
| Date | 24 Apr 2026 | 7 May 2026 | 10 May 2026 | 14 May 2026 |
| Waste mass (kg) | 20 | 20 | 20 | 30 |
| Draft | Natural | Natural | Forced | Forced |
| Tmax (°C) | 581 | 520 | 709 | 770 |
| CO peak (ppm) | 140 | 441 | 781 | 107 |
| NOx-indicative peak (ppm) | 35 | 20 | 97 | 28 |
| $SO_2$ peak (ppm) | 16 | Not reported | 95 | 18 |

Note: MQ-series values are sensor estimates/indicators; Trial 2 $SO_2$ was not reported during recalibration.

## DISCUSSION

### Engineering significance of the integrated architecture

The main environmental-engineering contribution is the creation of a field-operable information chain that makes small-incinerator combustion more observable. The individual components are established technologies, but their integration addresses a practical gap at community scale: high-temperature process conditions must be monitored together with lower-temperature gas-response channels while data remain available remotely. This combination supports environmental surveillance by allowing operators to review transient behavior, compare operating cycles, and document abnormal events rather than relying only on visual smoke or flame observations. The architecture therefore adds value through application-specific integration, thermal adaptation, and data traceability.

This architecture aligns with the general IIoT logic of sensing, communication, data contextualization, and decision support. The practical value of the layered design is modularity: a thermocouple can be replaced without redesigning the Cloud interface; a gas channel can be recalibrated without changing the temperature channel; and the dashboard can be modified independently of physical sensor placement. Such separation is consistent with the broader shift toward interoperable industrial data architectures and integrated process information flows

(Borgosz & Dikicioglu, 2024; Luis et al., 2025; Ou et al., 2025). For resource-constrained installations, modularity also reduces the risk that one failed component forces replacement of the entire monitoring chain.

## Why thermal conditioning matters

The passive bypass line is the most application-specific element of the platform because it allows low-cost gas sensors to operate near a hot combustion source without direct stack exposure. The observed 38–41 °C at the sensor station, compared with chamber temperatures reaching several hundred degrees Celsius, demonstrates effective thermal decoupling. From an environmental-monitoring perspective, this enables continuous trend surveillance with accessible sensors while avoiding the false assumption that the modules can be installed directly in the stack.

However, thermal conditioning creates a measurement trade-off. Cooling and transporting a gas sample can change condensation behavior, adsorption, residence time, and the concentrations reaching the sensing surface. The present study did not quantify these transport effects. Consequently, the bypass should be understood as an engineering compromise that enables sensor survivability and trend monitoring, not as a certified extractive sampling system. Future work should characterize line length, flow rate, temperature profile, condensation, response lag, and any loss of target species before making quantitative stack-emission claims. This limitation is conceptually consistent with broader sensing studies showing that harsh operating conditions and environmental variables can alter measurement behavior and therefore require explicit validation rather than assumption (Amaral et al., 2025; Chen, 2025).

## Interpretation of MQ-series outputs

The dynamic gas profiles show that the MQ channels responded to changing combustion conditions, but this responsiveness must not be interpreted as analytical selectivity. MQ-7 is CO-oriented, whereas MQ-135 is a multigas device; consequently, the latter is reported here as a NOx-indicative channel rather than a selective NOx analyzer. Bangkit Sanjaya Umbu (2023) discusses Rs/R0-based MQ-135 interpretation, and Wibisono et al. (2024) demonstrate practical MQ-7/MQ-135 use in an emission-monitoring context. These precedents support low-cost trend sensing but do not eliminate the requirement for application-specific reference calibration.

MQ-136 requires similar caution. The adopted voltage-concentration equation originated from a previous calibration against a gas analyzer, not from an independent reference-gas calibration performed on the exact sensor under the exact field conditions reported here. Semiconductor sensor response can vary between devices and with aging, humidity, temperature, oxygen availability, and interfering compounds. For this reason, the present results are most defensible as operational trends and event indicators. A SINTA-2-oriented paper benefits from making this limitation explicit because it distinguishes a credible low-cost monitoring study from an unsupported regulatory-compliance claim. The conservative interpretation adopted here is also consistent with current monitoring literature, which distinguishes useful in-situ sensing for process awareness from metrologically validated measurements used for high-consequence decisions (Samadpour & El-Mounayri, 2025; Ganesh & Ajithkumar, 2025).

## Value of iterative commissioning

An additional insight from the field trials is that system maturation required more than assembling components. The first tests exposed variations that motivated improvements to hardware configuration and sensor calibration. The second trial excluded the $SO_2$ channel while it was being evaluated. By the third test, after these refinements, the field records show more stable sensor behavior and uninterrupted real-time transfer during the experiment. This pattern illustrates a common characteristic of field IoT development: laboratory connectivity is only an initial milestone. Reliable operation also depends on power quality, mechanical placement, thermal isolation, grounding, calibration routines, and software error handling.

Reporting this progression is preferable to presenting only the final successful trial. The earlier limitations provide evidence for the design decisions that followed. They also identify where future system engineering

should concentrate. For example, a production-ready version should move from temporary wiring to a printed circuit board or industrial terminal block, include fused and regulated power distribution, protect analog inputs from voltage excursions, and place electronics in a sealed but thermally managed enclosure. A watchdog and local buffering strategy would further protect data continuity during Wi-Fi interruptions.

### Cloud monitoring as an operational tool

The ThingSpeak layer added value beyond visual convenience. Time-stamped Cloud storage created a historical record that can support post-event diagnosis, maintenance planning, and comparison of operating cycles. Research on real-time process decision support and online monitoring similarly emphasizes that data become operationally useful when they are contextualized as time-resolved information rather than isolated sensor values (Hameed et al., 2025; Zheng et al., 2025). An operator who sees only a current numerical value may not recognize whether the process is heating normally, undergoing a transient spike, or declining after fuel depletion; a time-series dashboard exposes these patterns. This is particularly relevant at community scale, where specialized combustion engineers may not be continuously present.

The platform also creates a foundation for future alarm logic. For example, the dashboard could issue notifications when temperature remains below an operational set point for a defined period or when a gas-response channel rises abruptly. Such alerts should not be implemented using arbitrary thresholds, however. They require validation against reference measurements and operational outcomes. The current study therefore supports the communication and visualization infrastructure needed for alarms but does not claim that regulatory or safety thresholds were validated.

### Relevance to resource-constrained waste management

The platform's main practical advantage is the use of accessible components. ESP32 development boards, thermocouple interfaces, and MQ sensors are inexpensive compared with industrial process analyzers. This lowers the barrier to acquiring continuous operational data and may be useful for educational laboratories, pilot facilities, community waste units, and early-stage technology demonstrations. Comparable low-cost IoT approaches have been reported for air-quality and environmental monitoring (Anitha et al., 2023; Arkhan & Elsi, 2024; Srinivasan et al., 2025), while the industrial literature shows that real-time sensing and digitalization can improve visibility and decision-making but that adoption remains constrained by skills, infrastructure, and organizational readiness (Shah et al., 2024; Kumar et al., 2025). The present study extends that logic to a thermally severe waste-treatment setting.

The economic argument should nevertheless be framed carefully. A low component cost does not guarantee a low life-cycle cost if sensors require frequent replacement, recalibration, or manual maintenance. Semiconductor gas sensors can drift over time, and the sampling line may accumulate particulate matter or condensate. Therefore, future techno-economic evaluation should include calibration labor, consumables, replacement intervals, network availability, and enclosure maintenance. The current study demonstrates technical feasibility, not a complete cost-of-ownership model.

### Relationship between monitoring and combustion performance

Although combustion behavior is not the principal analytical target of this article, the validation data show why continuous environmental monitoring is necessary. Temperature and gas responses changed markedly within individual burns, including strong transient gas responses before later high-temperature phases. A single grab measurement could therefore misrepresent the operating cycle. The data further suggest that environmental interpretation should consider combustion phase, air supply, and thermal stability together rather than assigning gas behavior to maximum temperature alone. This inference is exploratory because the four trials were commissioning burns rather than controlled replicated experiments.

## Comparison with conventional manual monitoring

Manual observation remains attractive because it requires little instrumentation, but it offers no objective record, depends on operator presence, and makes it difficult to distinguish short transients from sustained abnormal conditions. Similar limitations of experience-dependent process control have motivated intelligent monitoring in other manufacturing applications (Wang et al., 2024; Tiwari et al., 2025). The developed platform addresses these weaknesses by converting physical measurements into archived time series. The improvement is informational rather than fully automatic: the system does not yet regulate airflow, fuel feed, or shutdown, and it should therefore be described as a monitoring platform rather than a closed-loop control system.

## Data architecture, traceability, and reproducibility

A further contribution of the platform is the creation of a traceable digital pathway from the physical process to an archived record. In manual monitoring, the measurement, observation, transcription, and interpretation steps are often separated and may be performed by different people. Each handoff introduces the possibility of delay, transcription error, or loss of contextual information. In the present architecture, sensor outputs are digitized by the same embedded controller that assigns them to dedicated Cloud fields. The data are then stored with time information and can be inspected as synchronized trajectories. This reduces the number of manual transformations between the combustion event and the final record. For applied engineering research, such traceability is valuable because it allows anomalous readings to be revisited together with the corresponding temperature and operational phase rather than evaluated as isolated numbers.

The use of a common data channel also makes the system reproducible at the architectural level. A second unit can employ the same measurement logic even if a different incinerator geometry or sensor mounting arrangement is used. The key reproducible elements are the mapping between each physical channel and its microcontroller input, the calibration routine, the sampling sequence, the communication protocol, and the Cloud field structure. This is particularly important for small-scale waste-treatment research, where studies may otherwise report final concentration values without sufficient information about how the signals were acquired. By documenting the sensing chain, this work provides a starting configuration that can be replicated and then improved through reference calibration and better sampling control. This emphasis on contextualized, traceable data is consistent with the distinction between raw data, usable information, and operational knowledge discussed for industrial automation by Deubert et al. (2024b).

Reproducibility nevertheless requires more than sharing firmware. Semiconductor gas sensors exhibit unit-to-unit variation, so copying the same coefficients to another device does not guarantee the same response. A transferable protocol should therefore separate firmware structure from sensor-specific calibration constants. Future implementations should store calibration date, sensor identifier, baseline value, and calibration coefficients as metadata. Likewise, Cloud records should include system-status fields such as Wi-Fi connection state, supply voltage, or sensor fault flags. These additions would make it possible to distinguish an actual combustion anomaly from an instrumentation anomaly and would strengthen the evidentiary value of the data for maintenance and research. More broadly, industrial digitalization literature stresses that data pipelines should preserve context and support reliable transformation from raw measurements into usable information; otherwise, additional data volume does not automatically create operational knowledge (Rana et al., 2024; Arsen'eva et al., 2024).

## Deployment considerations for community operators and scale-up

For community deployment, technical performance must be accompanied by operational simplicity. The intended user may not be a specialist in combustion instrumentation, embedded electronics, or gas-sensor chemistry. A monitoring interface should therefore communicate trends and device status without requiring the user to interpret raw ADC values or calibration parameters. The ThingSpeak implementation already provides a useful first step because each parameter is visible as a dedicated time series. A future user-centered version could further separate normal monitoring screens from technical maintenance screens. The operator view could display

temperature, gas-response trends, connection status, and simple warnings, while the maintenance view could expose baseline resistance, calibration history, signal quality, and diagnostic information.

The system should also be designed around maintenance activities that can realistically be performed at neighborhood scale. The sampling line is exposed to combustion products and may accumulate soot, particulate matter, or condensate; it therefore requires an inspection and cleaning interval. MQ modules rely on heated sensing elements and may change response over time, so replacement and recalibration should be treated as routine service tasks rather than exceptional failures. Connectors near the incinerator should be mechanically secured against vibration and shielded from radiant heat. These apparently mundane design details can determine whether an IoT system remains useful after the initial demonstration period.

Scale-up presents a different set of issues. A single community incinerator can be served by one ESP32 node and one Cloud channel, but a network of installations would require device identification, standardized field naming, remote firmware management, access control, and data-retention policies. Network outages would become more consequential because missing data from several sites could compromise comparative evaluation. Local storage, message queuing, and automatic retransmission after reconnection would therefore be preferable to a design that depends entirely on continuous Wi-Fi availability. The basic architecture demonstrated here is compatible with such extensions because sensing, communication, and visualization are already separated into functional layers. As the architecture scales, cyber-physical security and multisensor communication resilience would also require explicit design attention (El-Kady et al., 2023; Cao et al., 2025).

## Limitations

Environmental implication. The platform addresses an information deficit rather than an emissions-treatment deficit. It cannot compensate for poor combustion or replace pollution-control devices, but it can make abnormal operating periods visible and archivable. For community waste management, that distinction is important: digital monitoring is most valuable when it supports better operating discipline, maintenance, and evidence-based intervention rather than being presented as proof of regulatory compliance.

Several limitations define the boundary of the present conclusions. First, the gas channels were not validated in this study against a traceable reference analyzer during the same incinerator trials. Second, MQ-135 is inherently multigas and the NOx interpretation is indicative. Third, the reported MQ-136 conversion relied on an external calibration relationship, and Trial 2 data were withheld during recalibration. Fourth, the study did not independently control humidity, gas-flow rate, oxygen concentration, or interfering species at the sensor chamber. Fifth, network reliability was demonstrated functionally but not quantified using latency, packet-loss, or uptime statistics. Sixth, only four field burns were available, and they differed in waste charge and air-supply conditions. Finally, no long-term drift or sensor-aging test was performed.

These limitations point directly to the next research stage. Reference-gas calibration and side-by-side comparison with a certified gas analyzer should be performed over the expected concentration range. A controlled sampling flow should be added, together with line-temperature measurement and condensate management. Network testing should include local buffering and quantitative delay/loss metrics. Long-duration experiments are needed to evaluate drift. Once these steps are completed, the platform could support more defensible alarm thresholds and may evolve toward a low-cost supervisory control layer.

## Pathway toward a validated smart-incinerator platform

The present monitoring node can be viewed as the first layer of a broader smart-incinerator architecture. The next layer should be metrological: each gas channel should be calibrated with certified gas mixtures or validated in parallel with an appropriate reference analyzer over the concentration range expected in the flue gas. Calibration should be repeated at multiple sensor-chamber temperatures and, where feasible, humidity conditions. Such testing would quantify bias, repeatability, response time, hysteresis, and cross-sensitivity and would determine whether a low-cost channel can support only qualitative alarms, semi-quantitative operational

decisions, or more demanding measurement tasks. The same principle applies to the temperature channel, which should be checked against a traceable reference thermometer at relevant points across its working range.

The second layer should be communication resilience. A field device should continue to record data when internet access is temporarily unavailable. A practical revision would therefore use local non-volatile storage with time stamps, followed by automatic synchronization after reconnection. Quantitative testing could then report median and upper-percentile transmission delay, missing-record rate, reconnection time, and successful upload fraction. These metrics would convert the current qualitative demonstration of stable communication into reproducible engineering performance indicators suitable for comparison with alternative platforms.

The third layer is decision support. Once measurement validity is established, the system could infer operational states such as ignition, active combustion, unstable combustion, and burnout from combined temperature and gas-response trajectories. Current smart-manufacturing research shows a broader progression from monitoring toward anomaly detection, predictive decision support, and adaptive control when sensor data are sufficiently validated and contextualized (Patel, 2025; Malomane et al., 2025; Gunasegaram et al., 2024; Zhang et al., 2025). Ultimately, validated states could be linked to controlled airflow through a blower or damper. Such closed-loop control is beyond the evidence available in the present study, but the demonstrated sensing, processing, and Cloud infrastructure provides the essential data pathway on which that future development can be built.

## CONCLUSION

An IoT-enabled multi-sensor platform was developed and field-demonstrated for environmental monitoring of a community-scale twin-chamber incinerator. The system integrated K-type thermocouple/MAX6675 temperature sensing, MQ-7, MQ-135, and MQ-136 gas-response channels, ESP32 acquisition, Wi-Fi communication, and ThingSpeak visualization. A passive bypass maintained the gas-sensor station at approximately 38–41 °C while chamber temperature reached 770 °C. Four field trials demonstrated synchronized recording of thermal and gas-response dynamics and remote data access. The platform is therefore suitable for operational surveillance, trend detection, and environmental information support in resource-constrained incinerator applications.

## REFERENCES

1. Aji, S., & Wardhani, D. H. (2024). Pengolahan limbah bahan berbahaya dan beracun (B3) dengan teknologi insinerasi pada fasilitas pengelolaan limbah terpadu kawasan Medan, 2(1), 17–25.
2. Amaral, F. A., Piardi, L., Leitao, P., & Neli, R. R. (2025). Validation of Surface Virtual Sensors for Plastic Injection Molds. APSCON - IEEE Appl. Sens. Conf., Proc. APSCON 2026 - 2026 IEEE Applied Sensing Conference, Proceedings. https://doi.org/10.1109/APSCON68325.2026.11497601
3. Anitha, N., Anne Caroline, S., Shalini, P., & Trisha, V. (2023). Air Quality Monitoring System. 2023 Intelligent Computing and Control for Engineering and Business Systems (ICCEBS), 96–105. https://doi.org/10.1109/ICCEBS58601.2023.10448553
4. Arkhan, M. G., & Elsi, Z. R. S. (2024). Air Quality Monitoring System Based Internet of Things. Brilliance: Research of Artificial Intelligence, 4(2), 669–673. https://doi.org/10.47709/brilliance.v4i2.4924
5. Arsen'eva, N. V., Putyatina, L. M., Kolosova, V. V., & Tikhonov, G. V. (2024). Digital Transformation as an Effective Development Strategy for Industrial Enterprises. Russian Engineering Research, 44(7), 1054–1057. https://doi.org/10.3103/S1068798X2470148X
6. Bangkit Sanjaya Umbu, A. (2023). Analisa grafik karakteristik sensitivitas sensor MQ-135 untuk menentukan persamaan hubungan antara ppm dan Rs/Ro. Jurnal Teori dan Aplikasi Fisika, 11(2), 49–60. https://doi.org/10.23960/2fjtaf.v11i2.6656
7. Borgosz, L., & Dikicioglu, D. (2024). Industrial internet of things: What does it mean for the bioprocess industries? Biochemical Engineering Journal, 201. https://doi.org/10.1016/j.bej.2023.109122
8. Borsato, M., Lattanzio, S., & Newnes, L. (2024). On the Assessment of People-Related Opportunities in Digitalisation. In Cooper A., Trigos F., Stjepandic J., Curran R., & Lazar I. (Eds.), Adv. Transdiscipl. Eng. (Vol. 60, pp. 814–823). IOS Press BV. https://doi.org/10.3233/ATDE240934

9. Cao, X., Zhao, L., Xia, Y., & Yang, H. (2025). Event-Triggered Secure Fusion Estimation with Watermarking Against Linear Man-in-the-Middle Attacks in Multirate Multisensor Systems. IEEE Transactions on Automation Science and Engineering, 22, 23798–23809. https://doi.org/10.1109/TASE.2025.3630714
10. Chen, T. (2025). Optical applications, fluctuation analysis and solutions in tool presetters. In Yu W. & Xia K. (Eds.), Proc SPIE Int Soc Opt Eng (Vol. 14007). SPIE. https://doi.org/10.1117/12.3091415
11. Deubert, D., Selig, A., & Verl, A. (2024b). On data, information, and knowledge in the context of online simulation in industrial automation. In Putnik G.D. (Ed.), Procedia CIRP (Vol. 130, pp. 1188–1193). Elsevier B.V. https://doi.org/10.1016/j.procir.2024.10.226
12. Dhiya'ulhaq, K. S., Sumaryo, S., & Permana, A. G. (2024). Sistem monitoring suhu pada mesin incinerator berbasis IoT. e-Proceeding of Engineering Telkom University, 11(1), 189–192.
13. El-Kady, A. H., Halim, S., El-Halwagi, M. M., & Khan, F. (2023). Analysis of safety and security challenges and opportunities related to cyber-physical systems. Process Safety and Environmental Protection, 173, 384–413. https://doi.org/10.1016/j.psep.2023.03.012
14. Fadillah, N. A., Muslim, M. I., Rosadi, A. H., Kamila, Y., & Ramadhani, I. (2025). Pengelolaan sampah berbasis teknologi tepat guna: Inovasi incinerator di Desa Tajau Landung, Kalimantan Selatan, 5(1), 91–100.
15. Ferdian Hutabarat, B., Peslinof, M., Afrianto, M. F., & Fendriani, Y. (2023). Sistem basis data pemantauan parameter air berbasis Internet of Things (IoT) dengan platform ThingSpeak. Journal Online of Physics, 8(2), 42–50.
16. Ganesh, N., & Ajithkumar, S. (2025). Advancements in quality control and monitoring strategies for wire arc additive manufacturing: A comprehensive review. Smart Technologies and Digital Transformation in Additive Manufacturing, 199–215. https://doi.org/10.1201/9781003569633-11
17. Gunasegaram, D. R., Barnard, A. S., Matthews, M. J., Jared, B. H., Andreaco, A. M., Bartsch, K., & Murphy, A. B. (2024). Machine learning-assisted in-situ adaptive strategies for the control of defects and anomalies in metal additive manufacturing. Additive Manufacturing, 81. https://doi.org/10.1016/j.addma.2024.104013
18. Gunasekaran, K., Vinoth Kumar, V., Kaladevi, A. C., Mahesh, T. R., Rohith Bhat, C., & Venkatesan, K. (2023). Smart Decision-Making and Communication Strategy in Industrial Internet of Things. IEEE Access, 11, 28222–28235. https://doi.org/10.1109/ACCESS.2023.3258407
19. Hameed, S., Karagoz, S., Ozdemir, A., Khosravi, A., Fatima, R., & Aitkaliyeva, G. (2025). Real-time decision support systems in chemical and process engineering. Artificial Intelligence in Chemical Engineering, 313–348. https://doi.org/10.1016/B978-0-443-34076-5.00021-3
20. Hassan, A., Dutta, P. K., Gupta, S., Mattar, E., & Singh, S. (2023). Emerging technologies in digital manufacturing and smart factories. In Emerging Technol. In Digit. Manuf. And Smart Factories (p. 291). IGI Global. https://doi.org/10.4018/9798369309209
21. Kumar, R., Dutta, G., & Phanden, R. K. (2025). Digitalization Adoption Barriers in the Context of Sustainability and Operational Excellence: Implications for SMEs. EMJ - Engineering Management Journal, 37(4), 355–371. https://doi.org/10.1080/10429247.2024.2372519
22. Luis, F., Filipe, P., Helena, L., Camelia, A., Nuno, L., & José, M. (2025). MQTT-UNS AND OPC UA IN RAMI4.0: A COMPARATIVE ANALYSIS FOR INDUSTRIAL COMMUNICATION. ASME Int Mech Eng Congress Expos Proc, 1-A. https://doi.org/10.1115/IMECE2025-167395
23. Malomane, M., Medoh, C., & Pretorius, J. H. (2025). PREDICTIVE MAINTENANCE STRATEGIES IN INDUSTRY 4.0: A META-ANALYSIS OF IOT APPROACHES IN MANUFACTURING. In Natarajan G., Ng E., & Zhang H. (Eds.), Proc. Int. Annu. Conf. Annu. Meet.: Powering Futur. Eng. Manag., ASEM (pp. 452–461). American Society for Engineering Management. https://www.scopus.com/pages/publications/105035388352?origin=resultslist
24. Nechita, R.-M., & Cristoiu, C. (2025). A SYSTEMATIC REVIEW OF DIGITAL TWIN APPLICATIONS IN INDUSTRY 4.0: SECTOR-SPECIFIC INSIGHTS. International Journal of Mechatronics and Applied Mechanics, 1(21), 173–185. https://doi.org/10.17683/ijomam/issue21.17
25. Ou, F., Suherman, J., Zhang, C., Wang, H., Bom, S., Davis, J. F., & Christofides, P. D. (2025). Industrial multi-machine data aggregation, AI-ready data preparation, and machine learning for virtual metrology

in semiconductor wafer and slider production. Digital Chemical Engineering, 15. https://doi.org/10.1016/j.dche.2025.100242

26. Patel, J. D. (2025). Digital Quality Management Systems-A Strategic Enabler for Predictive Maintenance and Operational Efficiency in Smart Manufacturing: Enhancing Smart Manufacturing Operations. Enhancing Operational Efficiency and Predictive Maintenance Through Digital Innovation, 45–74. https://doi.org/10.4018/979-8-3373-2474-6.ch004
27. Ramkumar, K. R., Singh, B., Pan, L., & Sharma, A. (2025). Sensor Technologies and Wireless Communications in Industry 5.0: A Solution for Smart Manufacturing. In Sensor Technol. And Wireless Commun. In Ind. 5.0: A Solut. For Smart Manuf. (p. 198). CRC Press. https://doi.org/10.1201/9781003535126
28. Rana, A. K., Chakraborty, S., Goel, P., Rana, S. K., & Elngar, A. A. (2024). Internet of Things and Big Data Analytics-Based Manufacturing. In Internet of Things and Big Data Analytics-Based Manufacturing (p. 273). CRC Press. https://doi.org/10.1201/9781032673479
29. Rooker, T., Mertzios, A., Pu, J., Lee, L., & Morgan, C. T. (2025). Assessing the value of data for sustainability. In Mativenga P. & Gallego-Schmid A. (Eds.), Procedia CIRP (Vol. 135). Elsevier B.V. https://doi.org/10.1016/j.procir.2025.08.178
30. Samadpour, F., & El-Mounayri, H. (2025). CRITICAL REVIEW OF CONTRIBUTING PARAMETERS, PREDICTIVE MODELS AND SENSING TECHNIQUES FOR PROSPECTIVE IN-SITU MONITORING AND CONTROL OF RESIDUAL STRESS IN METAL ADDITIVE MANUFACTURING (MAM). ASME Int Mech Eng Congress Expos Proc, 2-F219613. https://doi.org/10.1115/IMECE2025-166507
31. Sarosa, M., Wirayoga, S., Putri, R. I., & Adhisuwignjo, S. (2025). Waste incinerator monitoring system based on remote communication with Android interface. International Journal of Reconfigurable and Embedded Systems, 14(1), 136. https://doi.org/10.11591/ijres.v14.i1.pp136-144
32. Shah, S., Hussain Madni, S. H., Hashim, S. Z. B. M., Ali, J., & Faheem, M. (2024). Factors influencing the adoption of industrial internet of things for the manufacturing and production small and medium enterprises in developing countries. IET Collaborative Intelligent Manufacturing, 6(1). https://doi.org/10.1049/cim2.12093
33. Srinivasan, P., Fredlin, J. J., Subramanian, M. S., & Shankar, R. A. (2025). IoT-Based Real-time Air and Water Quality Monitoring System Using ESP32 and ThingSpeak. FMDB Transactions on Sustainable Intelligent Networks, 2(1), 49–58. https://doi.org/10.69888/ftsin.2025.000369
34. The MathWorks, Inc. (2025). ThingSpeak - MATLAB & Simulink.
35. Tiwari, N., Jaju, S., & Untawale, S. (2025). Integrating IoT and Machine Learning for Productivity Improvement in CNC Machine Shop. Int. Conf. Emerg. Trends Eng. Technol., ICETET. International Conference on Emerging Trends in Engineering and Technology, ICETET. https://doi.org/10.1109/ICETETSIP64213.2025.11156888
36. Vidyakant Jha, A., & Appasani, B. (2024). Cyber Physical System 2.0: Communication and Computational Technologies. In Cyber Physical System 2.0: Communication and Computational Technologies (p. 335). CRC Press. https://doi.org/10.1201/9781003559993
37. Wang, J., Tian, Y., Hu, X., Fan, Z., Han, J., & Liu, Y. (2024). Development of grinding intelligent monitoring and big data-driven decision making expert system towards high efficiency and low energy consumption: Experimental approach. Journal of Intelligent Manufacturing, 35(3), 1013–1035. https://doi.org/10.1007/s10845-023-02089-1
38. Wibisono, E. A., Junaedi, D., & Subarkah, R. (2024). Implementasi penggunaan Arduino dengan sensor MQ-7 dan sensor MQ-135 untuk pengukuran emisi engine diesel, 1401–1410.
39. Zhang, H., Yu, Y., Liu, X., Liang, N., Kim, Y., Shin, D., Moon, S. K., & Choi, J. P. (2025). Autonomous printing process optimisation and in-situ anomaly detection in fused deposition modelling using an integrated data-driven approach. Virtual and Physical Prototyping, 20(1). https://doi.org/10.1080/17452759.2025.2545523
40. Zheng, C., Li, X., Jiang, C., Wang, Q., Wang, H., & Cai, Z. (2025). Knowledge-Driven Framework for Online Monitoring and Fault Diagnosis in Manufacturing Lines. In Wang H. & Li S. (Eds.), Global Reliability Prognostics Health Manag. Conf., PHM-Xian. Institute of Electrical and Electronics Engineers Inc. https://doi.org/10.1109/PHM-Xian66756.2025.11427752