Simulation-Based Learning of Hysteresis Modelling: A Comparative Study of Bouc–Wen and Modified Bouc–Wen Models for Mechanical Engineering Students

Muhammad Danial Haikal Yaacob[1], Mohd Hanif Harun[1*], Mohd Azman Abdullah[1], Fadhli Syahrial, Nur Fathiah Mohd Nor[1], Ahmad Hafidzal Mohd Yamin[2]

[1]Faculty of Mechanical Technology and Engineering, Universiti Teknikal Malaysia Melaka (UTeM), Hang Tuah Jaya, 76100 Durian Tunggal, Melaka, Malaysia.

[2] School of Mechanical Engineering, Faculty of Engineering, Universiti Teknologi Malaysia, 81310 Johor Bahru, Johor, Malaysia.

***Corresponding Author**

DOI: https://doi.org/10.47772/IJRISS.2026.101100179

Received: 27 October 2026; Accepted: 01 November 2026; Published: 23 November 2026

ABSTRACT

The MR dampers have gained great popularity because of their ability to produce controllable damping force in varying operating conditions. However, there exist difficulties in modelling them accurately mathematically because of their nonlinear hysteretic behaviour. Bouc–Wen and Modified Bouc–Wen models have been developed to describe this behaviour though they differ in mathematical formulation and their responses. This paper aims at developing and comparing the Bouc–Wen and Modified Bouc–Wen models through numerical simulations to study their hysteretic behaviour and impact of selected parameters on it. Formulations of both hysteresis models have been done based on their governing equation and also modelling in MATLAB/Simulink software has been done. The simulation process includes development of the model subsystems, excitation of the models with various inputs and analysis of their response to such inputs. Hysteresis behaviour has been studied using the relationship between force-displacement and force-velocity while sensitivity analysis has been done to study the effect of varying parameters on hysteresis behaviour. The simulation results indicate that both models were able to demonstrate hysteretic behaviour, but differences in the predicted force response by the two models were caused by their different mathematical formulations. The modified Bouc-Wen model contains additional mechanical components and internal displacement, which gives a better description of damper dynamics. Moreover, parameter changes led to variation in the shape and characteristics of the hysteresis loops. This reveals the significance of proper selection of the parameters in mathematical modelling. Thus, this comparative study presents an understanding of the simulation characteristics of both hysteresis models. The findings serve as a foundation for future research on model verification, parameter identification, and development of controllers for MR damper applications.

Keywords: Magnetorheological damper, Bouc–Wen model, Modified Bouc–Wen model, hysteresis modelling, MATLAB/Simulink

INTRODUCTION

Conventional dampers are commonly used to reduce vibration but have fixed damping characteristics, limiting their ability to adapt to changing operating conditions. Therefore, magnetorheological (MR) dampers have gained attention due to their fast response, low energy consumption, and controllable damping performance (1).

MR dampers use magnetorheological fluid that changes its properties when exposed to a magnetic field. By adjusting the electrical current, the damping force can be controlled according to different operating conditions. However, modelling MR dampers remains challenging because of their nonlinear hysteresis behaviour, where damping force depends on displacement, velocity, and previous motion. Therefore, mathematical models are required to predict their dynamic behaviour accurately.

Among the available mathematical models, the Bouc–Wen and Modified Bouc–Wen models are widely used to describe nonlinear hysteresis behaviour. The Bouc–Wen model has a relatively simple mathematical structure and can represent smooth hysteresis loops. However, it has limitations in describing force–velocity roll-off behaviour at low velocities. The Modified Bouc–Wen model introduces additional damping and stiffness components to represent more complex damper characteristics, although its mathematical structure is more complicated. MATLAB/Simulink provides a suitable platform for developing and analysing both models through numerical simulations. The software allows mathematical equations to be implemented and damping force responses to be examined using force–time, force–displacement, and force–velocity graphs. It also allows the effects of selected parameters on hysteresis behaviour to be investigated.

Besides the investigation of hysteretic properties of MR dampers, this paper shows how MATLAB/Simulink can be used as an instrument for education of mechanical engineering students through computer modeling. The implementation of Bouc-Wen and Modified Bouc-Wen equations through Simulink blocks allows students to see how the mathematical models describe the properties of nonlinear damping. The force-time, force-displacement, and force-velocity dependencies show the hysteresis properties visually, while changing of parameters shows how different coefficients affect the values of damping force. This method can be useful for educational purposes in classes or laboratories by connecting mathematical models with simulation results. However, the current study is based only on numerical modeling.

Therefore, this study focuses on developing and comparing the Bouc–Wen and Modified Bouc–Wen models using MATLAB/Simulink. The comparison aims to analyse their nonlinear hysteresis characteristics, damping force responses, and parameter effects. This study also provides a better understanding of MR damper modelling and a foundation for future research in vibration control systems. The objectives of this project are to study the mathematical modelling and nonlinear hysteretic behaviour of magnetorheological (MR) dampers using the Bouc–Wen and Modified Bouc–Wen models, to develop the mathematical equations of both models for simulation in MATLAB/Simulink, and to analyse and compare their performance based on force–time, force–displacement, and force–velocity responses.

LITERATURE REVIEW

The magnetorheological damper, referred to as an MR damper, is a semi-active vibration absorber that utilizes the magnetorheological fluid to generate controllable damping forces. The MR fluid contains magnetically sensitive particles in a base fluid. Once the magnetic field is applied to the fluid, the particles arrange themselves in chains, thus increasing the resistance of the fluid. Controlling the electrical current through the damper controls the strength of the magnetic field, which enables the generation of the damping force based on the operational needs. MR dampers are extensively studied due to their controllability of the damping force, low power consumption, and applicability in vibration suppression systems (2).

The dynamic behaviour of an MR damper is nonlinear and has hysteresis, meaning that the damping force not only depends on the instantaneous displacement and velocity but also on the previous motion of the damper. The behaviour causes hysteresis loops to form in force-displacement and force-velocity curves. Precise representation of such characteristics is required for accurate predictions of the damper's performance at various excitation frequencies, displacement amplitudes, and control inputs. Qian et al. (3) explored frequency-dependent Bouc-Wen modelling and emphasized the significance of taking into consideration dynamic characteristics in the development of MR damper models.

MR damper models can typically be divided into parametric and non-parametric models. Parametric models provide mathematical description of the damper and identifiable parameters corresponding to stiffness, damping, and hysteresis. Such models include Bingham Visco-plastic, Bouc-Wen, and Modified Bouc-Wen models. In turn, non-parametric models describe the input-output relationships using experimentally derived functions or other data-driven techniques. Although data-driven models may have the capability of representing complicated nonlinear characteristics, their performance relies on the availability and quality of data.

From all the parametric methods, the Bouc-Wen and Modified Bouc-Wen models retain their significance due to the fact that these models offer mathematical formulations of hysteresis which can be used in dynamic simulations. In one study by (2), a Modified Bouc-Wen model was used to simulate the nonlinear properties of an MR damper before implementing it into a suspension control system. Hence, these models offer a good starting point in the study of MR dampers using MATLAB/Simulink.

Bouc-Wen Model

The Bouc-Wen model is a mathematical hysteresis model that was initially introduced to characterize the nonlinear behaviour of restoring forces in mechanical systems. This model has since been applied to MR dampers owing to its capability to model smooth hysteresis loops through relatively concise differential equations. The Bouc-Wen model comprises a hysteretic component, linear stiffness component, and viscous damping component in modelling the force produced by the damper. Qian et al. (3) examined the frequency-dependent behaviour of the Bouc–Wen model and demonstrated the relevance of its mathematical formulation for representing MR damper dynamics. Similarly, Li et al. (4) used a Bouc–Wen hysteresis model with experimentally identified parameters to investigate vehicle body-height control using MR dampers. These studies indicate that the Bouc–Wen model remains useful for analysing nonlinear damper characteristics and supporting suspension system development.

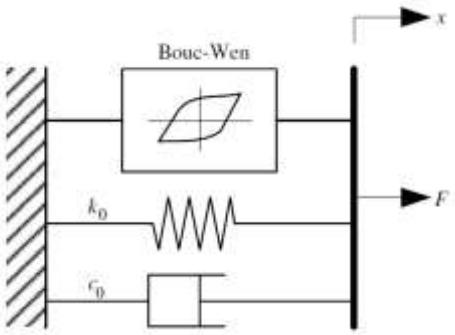

Figure 1: Bouc–Wen model

For the standard Bouc–Wen model, the nonlinear damping force can be calculated as follows:

$$F = \alpha z + c_0\dot{x} + k_0(x - x_0) \quad \text{(Equation 1)}$$

where F represents the damping force, α is the coefficient associated with the hysteretic force, z is the hysteretic evolutionary variable, c_0 is the viscous damping coefficient, k_0 represents the stiffness coefficient, x is the damper displacement, and x_0 is the reference displacement.

The hysteretic evolutionary variable is defined as:

$$\dot{z} = -\gamma|\dot{x}||z|^{n-1}z - \beta\dot{x}|z|^n + A\dot{x} \quad \text{(Equation 2)}$$

where A, β, γ, and n are the model parameters that determine the shape and characteristics of the hysteresis loop. Specifically, A controls the amplitude of the hysteretic response, β and γ influence the shape of the hysteresis

loop, and n determines the smoothness of the transition between elastic and plastic behaviour. By adjusting these parameters, different force–displacement and force–velocity relationships can be reproduced.

The model parameters can also be expressed as functions of the filtered control voltage:

$$\alpha(u) = \alpha_a + \alpha_b u, c_0(u) = c_{0a} + c_{0b} u, k_0(u) = k_{0a} + k_{0b} u \quad \text{(Equation 3)}$$

The filtered voltage is determined by:

$$\dot{u} = -\eta(u - v) \quad \text{(Equation 4)}$$

where u is the filtered voltage, v is the applied control voltage, and η is a parameter representing the response rate of the voltage-dependent dynamics.

The Bouc–Wen model is suitable for numerical simulation because its governing equations can be implemented using mathematical and integration blocks in MATLAB/Simulink. However, the standard model may not reproduce all experimentally observed force–velocity characteristics, particularly the roll-off behaviour near low velocities. These limitations provide a reason to investigate the Modified Bouc–Wen model, which introduces additional mechanical elements and internal dynamics to improve the representation of MR damper behaviour.

Modified Bouc-Wen Model

The Modified Bouc-Wen model is a development of the standard Bouc-Wen model used to enhance the modelling of the nonlinear and hysteretic properties of MR dampers. The model adds extra viscous and stiffness components to capture the dynamic behaviour of the damper including the roll-off behaviour in the force-velocity relationship. Despite having more parameters and differential equations than the standard model, the Modified Bouc-Wen model offers a detailed description of the internal mechanical behaviour of MR dampers.

Peng (2) used a Modified Bouc-Wen model to describe the hysteretic behaviour of an MR damper in an off-road vehicle suspension system. The identified model was later used in a control strategy to facilitate damping-force tracking and vibration suppression. This shows that the Modified Bouc-Wen model still has applications in the modelling and integration of MR dampers into advanced suspension control systems.

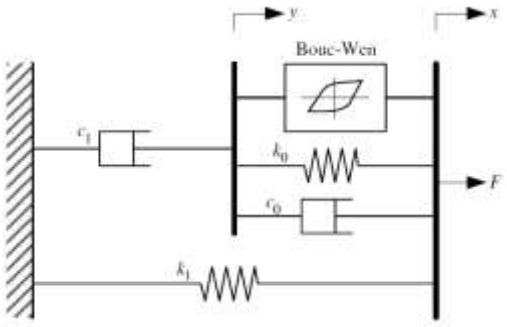

Figure 2: Modified Bouc–Wen model

For the Modified Bouc–Wen model, the nonlinear damping force can be calculated as:

$$F = \alpha z + c_0(\dot{x} - \dot{y}) + k_0(x - y) + k_1(x - x_0) \quad \text{(Equation 5)}$$

The equation can also be expressed as:

$$F = c_1\dot{y} + k_1(x - x_0) \quad \text{(Equation 6)}$$

where $\dot{y}$ represents the internal displacement variable, c_1 is an additional viscous damping coefficient, and k_1 represents the accumulator stiffness.

(Equation 5) and (Equation 6) are two equivalent expressions for the same total damping force. They describe the force balance of the Modified Bouc–Wen mechanical arrangement and must not be added together when calculating the output force.

The hysteretic evolutionary variable is expressed as:

$$\dot{z} = -\gamma|\dot{x} - \dot{y}||z|^{n-1}z - \beta(\dot{x} - \dot{y})|z|^n + A(\dot{x} - \dot{y}) \quad \text{(Equation 7)}$$

The internal displacement velocity is defined as:

$$\dot{y} = \frac{1}{c_0 + c_1}[\alpha z + c_0\dot{x} + k_0(x - y)] \quad \text{(Equation 8)}$$

In the Modified Bouc–Wen model, the coefficient c_0 represents the viscous damping contribution at higher velocities, while c_1 is introduced to represent the force roll-off behaviour at lower velocities. The stiffness coefficient k_0 controls the stiffness contribution associated with the internal displacement, while k_1 represents the accumulator stiffness. The evolutionary variable z describes the hysteretic characteristics of the MR damper.

The voltage-dependent model parameters are expressed as:

$$\alpha(u) = \alpha_a + \alpha_b u, c_0(u) = c_{0a} + c_{0b}u, c_1(u) = c_{1a} + c_{1b}u \quad \text{(Equation 9)}$$

The filtered voltage u is determined using (Equation 4)

The Modified Bouc-Wen model can be implemented on MATLAB/Simulink by using the conventional mathematical blocks, such as summation, multiplication, absolute value, gain, and integrator blocks. The inputs to the model include displacement, velocity, and control voltage, while the output of the model is the damping force. Such implementation will enable the hysteretic features of the model to be explored and used as the basis for future design of the PID controller.

The Modified Bouc-Wen model becomes more complex than the Bouc-Wen model due to the presence of additional parameters and internal states. However, due to its ability to model more complex nonlinear behaviour, it is valuable in applications where accurate force modelling and control are required. As cited by (2), the presence of the Modified Bouc-Wen model is indispensable in the case of MR suspension systems.

Polynomial Model

The use of the polynomial model will also be explained here as another model option that could potentially serve as an alternative approach for modelling purposes. However, this model will not be used or compared quantitatively in any way within the present computer simulations.

On the contrary, emphasis will be put only on the Bouc–Wen and Modified Bouc-Wen models, since these mathematical descriptions allow one to implement the differential equation for hysteretic behaviour directly. In the process of implementing this type of model, it can be advantageous to consider the hysteresis loop in its various regions of motion, e.g., acceleration and deceleration.

The damping force can be expressed as:

$$F = \sum_{i=0}^{n} a_i \, v^i \qquad \text{(Equation 10)}$$

where F represents the damping force, a_i represents the polynomial coefficients, v is the piston velocity, and n is the polynomial order.

The accuracy of the polynomial model depends on the choice of the polynomial order and the experimental data used for parameter identification. High-order polynomial models may fit complicated force–velocity relationships, but they may also lead to overfitting and unreliable predictions for operating conditions different from those used during identification.

The recent studies on MR dampers still focus on the importance of the accuracy of the model under various excitation conditions. Qian et al. (3) considered frequency-dependent modelling, whereas (2) used a combination of a physics-based hysteresis model with an extra correction to increase the force prediction accuracy. The above-mentioned studies prove that a simple fitted force–velocity relationship may not be enough in the case of the influence of hysteretic dynamics and input variation on the system behaviour.

In this paper, the polynomial model is considered as one of the possible alternatives. Nevertheless, more emphasis will be placed on the Bouc–Wen and Modified Bouc–Wen models since they have differential equations that describe hysteretic phenomenon and allow building dynamic models in MATLAB/Simulink.

Application of MR Damper

MR dampers have been researched extensively within many engineering disciplines due to their ability to produce adjustable damping forces with minimal energy consumption. Because of their semi-active nature, they make vibration control systems capable of adjusting themselves based on operating circumstances using less energy than fully active dampers. Different from traditional passive dampers, MR dampers have the ability to change their damping performance by varying the current flow. They find application in fields including but not limited to automotive suspension systems, buildings, and bridges.

Application in Automotive Industry

Automotive suspension systems play an important role in maintaining ride comfort, handling, and vehicle stability under different driving conditions. However, conventional passive suspension systems have fixed damping characteristics, which limit their ability to adapt to changing road conditions. In contrast, semi-active suspension systems equipped with magnetorheological (MR) dampers can adjust their damping force according to vehicle dynamics and control requirements, offering greater flexibility in managing vehicle vibrations (5).

Tang et al. (6) investigated a semi-active suspension system using a quarter-car model equipped with an MR damper represented by the Bouc–Wen model. The particle swarm optimisation (PSO) algorithm was applied to identify the MR damper parameters and tune the linear quadratic regulator (LQR) controller. Their findings demonstrated that PSO could effectively support MR damper modelling and suspension controller optimisation, leading to improved performance in terms of vehicle body acceleration and displacement.

Similarly, Li et al. (4) examined vehicle body height control using MR dampers. They developed a nonlinear suspension model incorporating an MR damper and estimated the Bouc–Wen hysteresis model parameters through experimental testing and the least-squares method. Their study highlighted the potential of adjustable damping characteristics to influence suspension behaviour and improve vehicle dynamics control.

More recently, Peng et al. (2) proposed a modelling and control approach for MR suspension systems in off-road vehicles. They employed the Modified Bouc–Wen model to represent the nonlinear hysteretic behaviour of the MR damper. An inverse modelling technique combined with disturbance compensation was introduced to improve damping force tracking and vibration isolation. The proposed approach was evaluated through quarter-car simulations and vehicle experiments, demonstrating the application of MR damper modelling and control under different operating conditions.

Overall, these studies highlight the potential of MR dampers to improve automotive suspension performance when integrated with accurate mathematical models and suitable control strategies. Building on these findings, developing a Modified Bouc–Wen MR damper model using MATLAB/Simulink provides a practical foundation for understanding and analysing the nonlinear damping force characteristics. This model can subsequently be

used to investigate the effectiveness of a proportional–integral–derivative (PID) controller for semi-active suspension applications.

Application in Building Construction

Structures experience dynamic loading due to wind forces, earthquakes, and other external disturbances. Structural vibration that is too much can have an effect not only on the performance of the structure but on the comfort of occupants. Thus, vibration dampers are utilized to minimize vibration and optimize the dynamic behaviour of building structures.

The MR damper is a good candidate for semi-active structural vibration control because the damping properties of this type of damper can be controlled by varying the electrical current passing through it. Once connected to a structure control system, the damper can control its resistance based on the vibration that is measured.

The efficiency of MR dampers in structural engineering relies on the possibility to represent the non-linear hysteresis of the mathematical model and to predict the corresponding damping forces. The modelling approach considered by (3) is appropriate for such tasks since the variations in excitation frequency have an effect on the work of the hysteretic damper. The correct simulation of these phenomena is important for analysis of the dynamic reaction of a structure exposed to varying loadings.

Though in the current paper there is no need to simulate a building, structural vibration control is one of the examples that proves the importance of the choice of the hysteresis model. The models represented by BW and MBW equations can describe force reactions in case of changing displacement and velocity. However, they are applicable for a specific building task only after parameter identification.

Application in Bridges

Bridges, particularly cable-stayed bridges, are susceptible to vibration caused by wind, traffic, and other dynamic loading conditions. Stay cables generally have low inherent damping, making them vulnerable to excessive oscillations and resonance. The installation of supplemental damping devices is one method used to reduce cable vibration and improve structural performance.

Du (7) et al. (2024) explored semi-active vibration control of nonlinear parametric vibration of super-long stay cables with the use of MR fluid dampers. In the research, semi-active vibration control was proposed as a means of minimization of large amplitude oscillation in cables caused by parametric vibrations. This work proves that the interest to use controllable MR dampers as bridge vibration reduction measures is preserved. The effectiveness of an MR damper in the case of bridge construction is contingent on the damper capability to create an appropriate force. In a bridge system, the damper is subjected to different displacements and velocities, and hence the force response becomes nonlinear. Mathematical models capable of describing hysteretic behaviour become important for analysing the damper performance.

The Bouc-Wen and Modified Bouc-Wen models become helpful for describing the nonlinear force characteristics of MR dampers. At the same time, despite the absence of bridge simulations in the current research, it is evident that the engineering significance of hysteris modelling is broader than bridge systems only.

Simulation-Based Learning in Engineering Education

Simulation-based learning provides opportunities for mechanical engineering students to connect mathematical concepts with numerical simulation results. Ab Patar et al. (9) developed the Vibration Simulation and Analysis Teaching Tool (VSATT) using MATLAB/Simulink to support the understanding of mechanical vibration concepts through interactive simulations. Similarly, Negahban (10) discussed the role of simulation-based learning in engineering education and highlighted the importance of integrating educational approaches with appropriate learning assessments.

Based on these studies, the Bouc–Wen and Modified Bouc–Wen models developed in the present study could be used as supplementary teaching materials in mechanical engineering classrooms and computer laboratories. Students could examine the governing equations, adjust selected model parameters, and compare force–time, force–displacement, and force–velocity responses to understand nonlinear hysteresis behaviour. However, the present study is limited to numerical simulations and does not include experimental validation or assessment of student learning outcomes.

METHODOLOGY

Mathematical modelling of Bouc-Wen Model

As mentioned in literature review, Figure 1 shows Bouc-Wen model. For the standard Bouc-Wen model, nonlinear force of damper is calculated as in (Equation 1) where α is the Bouc-Wen model parameter related to the ratio of MR material's final and initial yield stress and k_0 and c_0 are spring stiffness coefficient and dashpot damping coefficient, respectively, and z is the hysteretic deformation which is defined as in (Equation 2) in which A, β and γ are Bouc-Wen model shape parameters.

Mathematical modelling of Modified Bouc-Wen Model

Figure 2 shows a modified Bouc-Wen model. For modified Bouc-Wen model, the nonlinear force is calculated as in (Equation 5) or can also be written as in (Equation 6) where z is evolutionary variable given by in (Equation 7). In the modified Bouc-Wen model, the accumulator stiffness is represented by k_1 and the viscous damping observed at larger velocities is represented by c_0. A dashpot, represented by c_1, is included in the model to produce the roll-off that was observed in the experimental data at low velocities, k_0 is present to control the stiffness at large velocities and x_0 is the initial displacement of spring k_1 associated with the nominal damper force due to the accumulator.

MATLAB Simulink Model of Bouc-Wen Model

Bouc-Wen Simulink Model is shown in Figures 3 to 8 below shows step by step process in modelling Bouc-Wen model. (Equation 4) in has been used to develop model as shown in Figure 3.

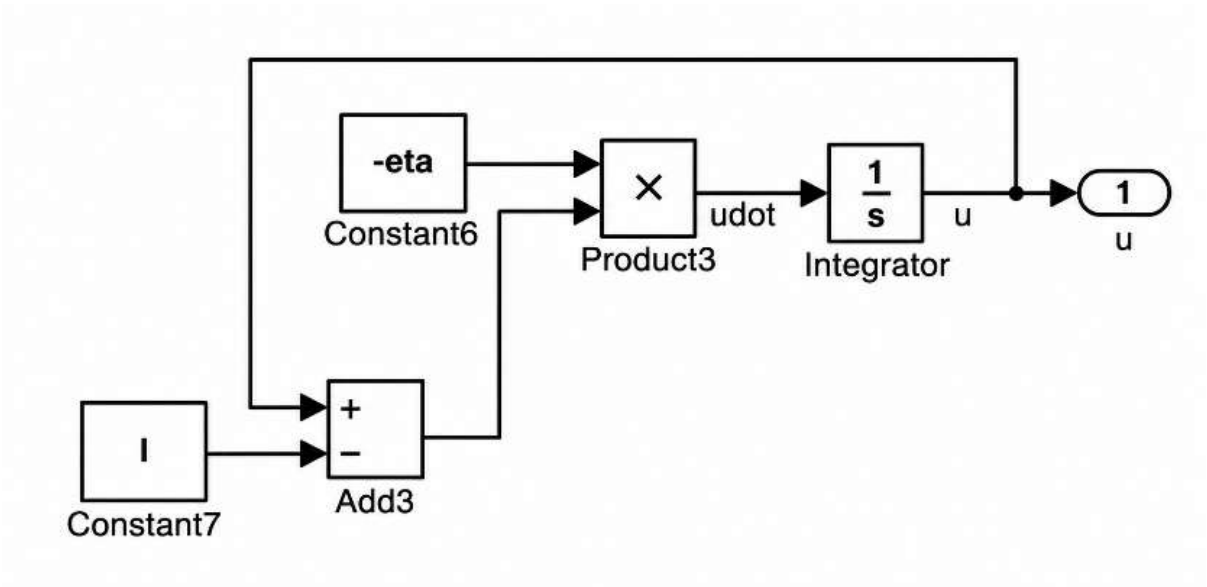

Figure 3: Subsystem for applied current, v for Bouc-Wen model.

ISSN No. 2454-6186 | DOI: 10.47772/IJRISS | Volume X Issue XI November 2026

The process of modelling continued with (Equation 3) in which include parameter of α , k_0 and c_0 as shown below in Figure , 4 and 5.

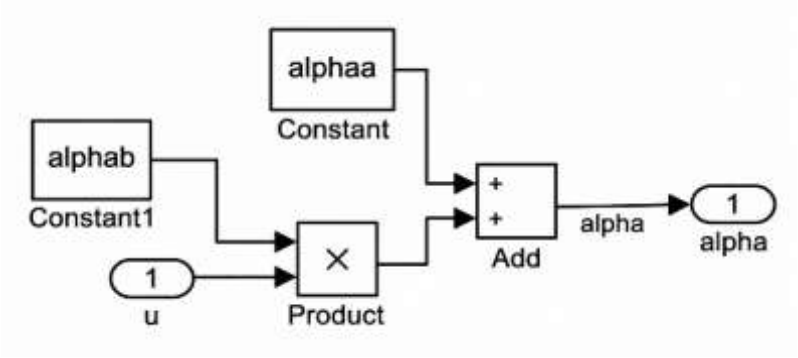

Figure 4: Subsystem of parameter α for Bouc-Wen model.

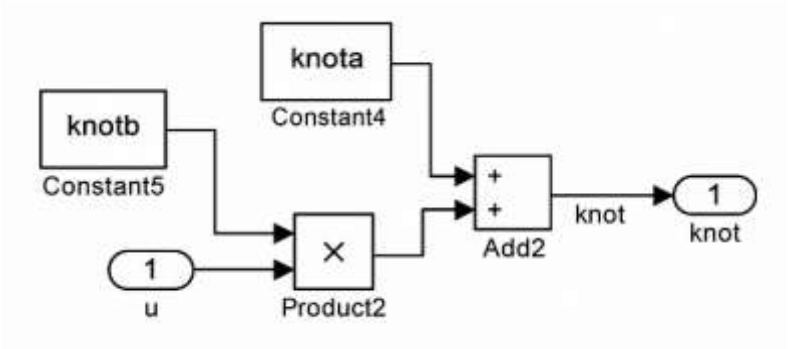

Figure 5: Subsystem of parameter k_0 for Bouc-Wen

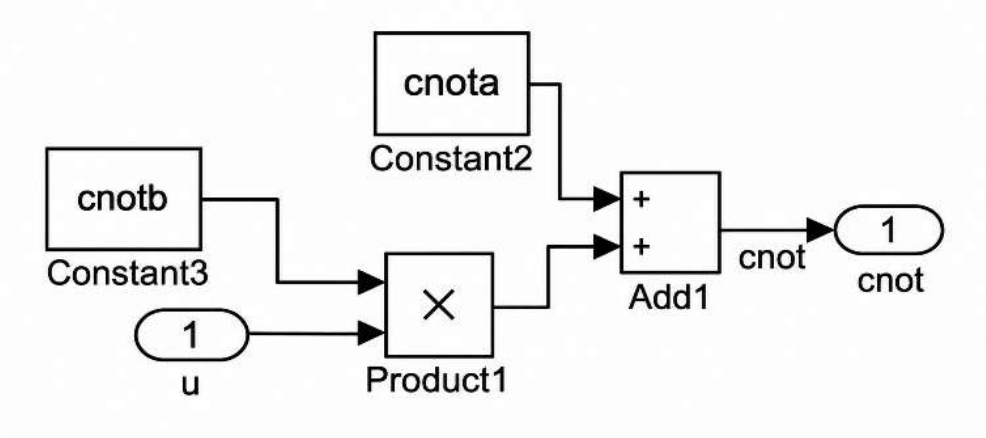

Figure 6: Subsystem of parameter c_0 for Bouc-Wen model.

The next step of modelling process involves (Equation 2) that relate to hysteresis behaviour of Bouc-Wen model shown in Figure 7. After all steps above was completed, set of Bouc-Wen model was finished by including (Equation 1) as shown in Figure 8.

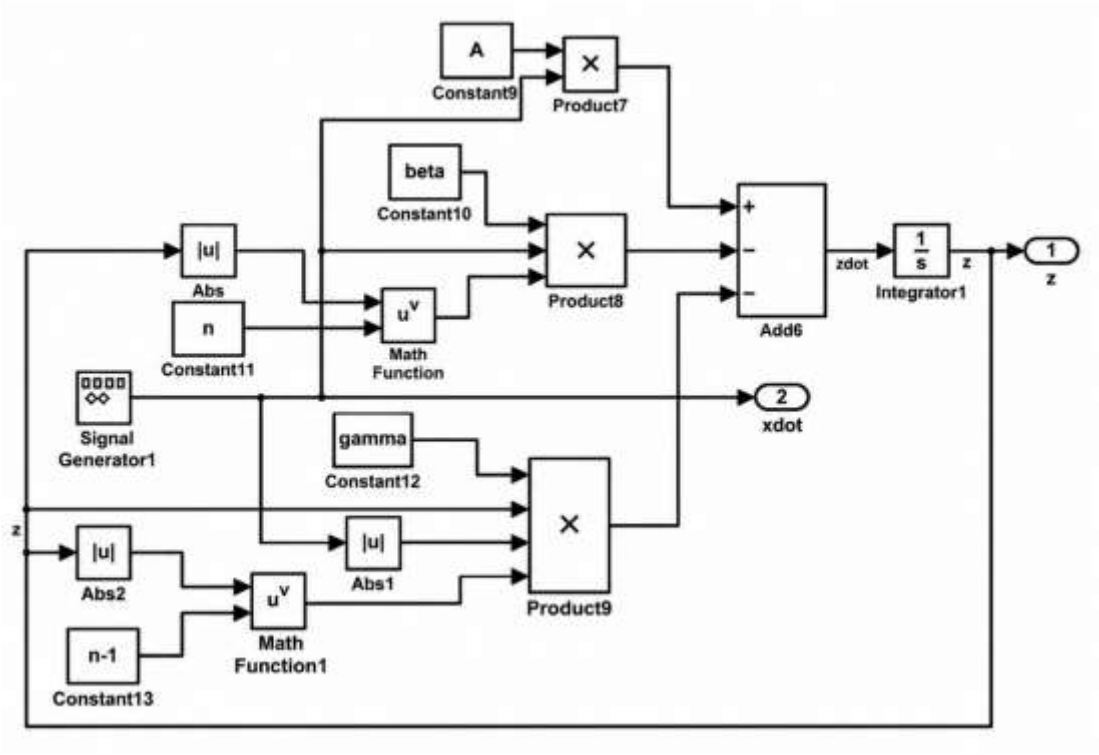

Figure 7: Subsystem of hysteresis, *z* for Bouc-Wen model.

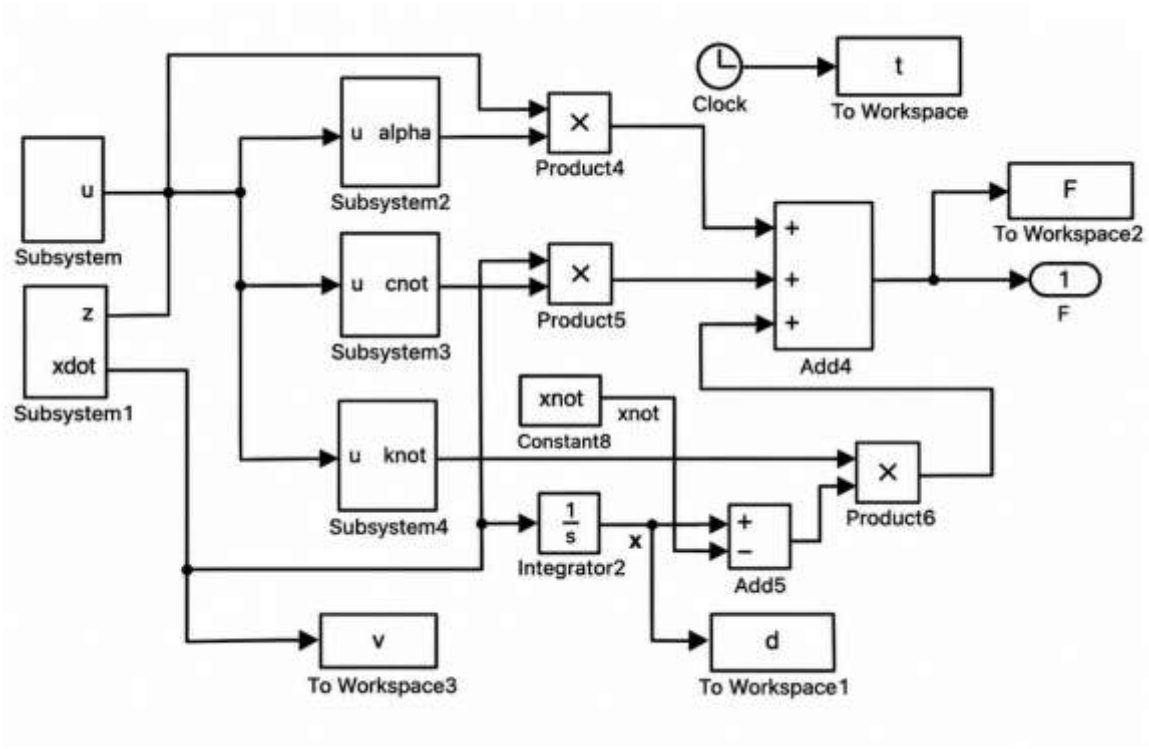

Figure 8: Complete Bouc-Wen Simulink model subsystem.

MATLAB Simulink of Modified Bouc-Wen MATLAB Simulink Model

Modified Bouc-Wen Simulink Model is shown in Figure 9-16 below shows step by step process in modelling modified Bouc-Wen model. (Equation 4) in has been used to develop model as shown in Figure 9. The process

of modelling continued with (Equation 9) in which include parameter of α, c_0 and c_1 as shown below in Figure 9,10, and 11.

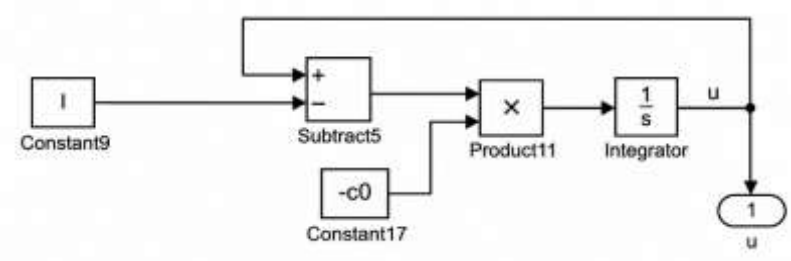

Figure 9: Subsystem for applied current, v for modified Bouc-Wen model.

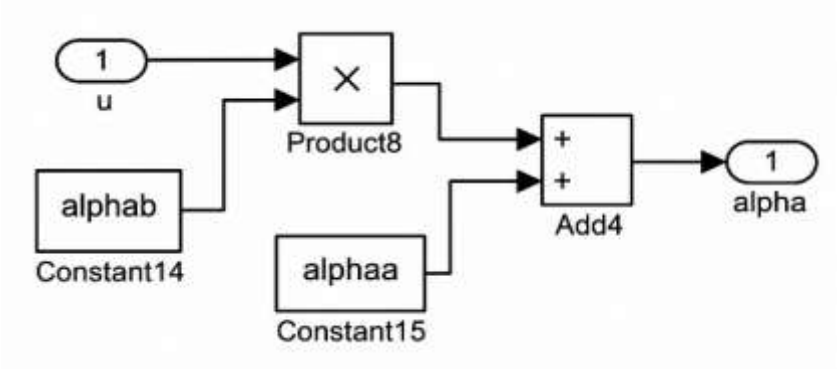

Figure 10: Subsystem of parameter α for modified Bouc-Wen model.

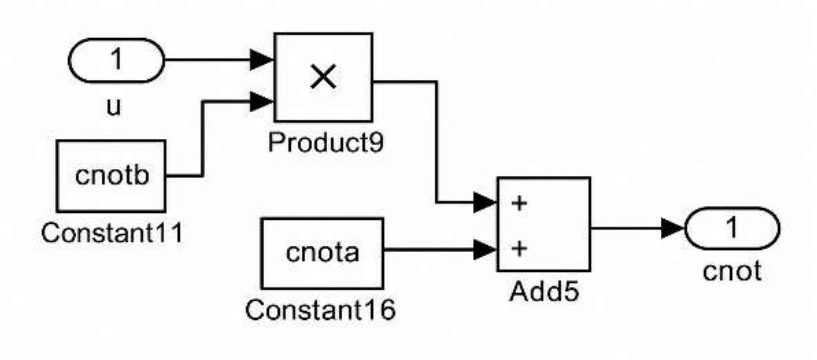

Figure 11: Subsystem of parameter c_0 for modified Bouc-Wen model.

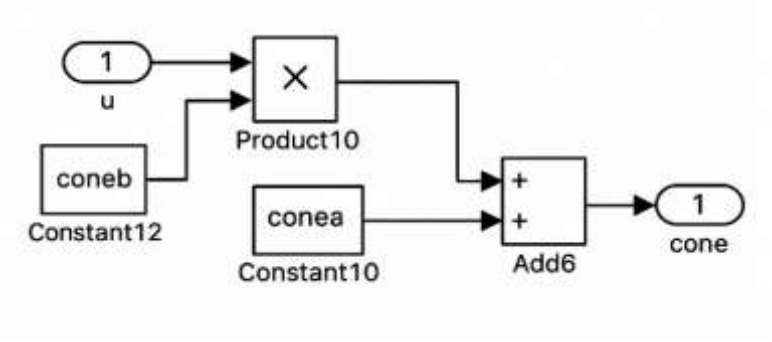

Figure 12: Subsystem of parameter c_1 for modified Bouc-Wen model.

ISSN No. 2454-6186 | DOI: 10.47772/IJRISS | Volume X Issue XI November 2026

The next step of modelling process involves (Equation 7) that relate to hysteresis behaviour of modified Bouc-Wen model shown in Figure 13 below. After all steps above was completed, set of modified Bouc-Wen model was finished by including (Equation 5) and (Equation 8) as shown in Figure 14-16 below.

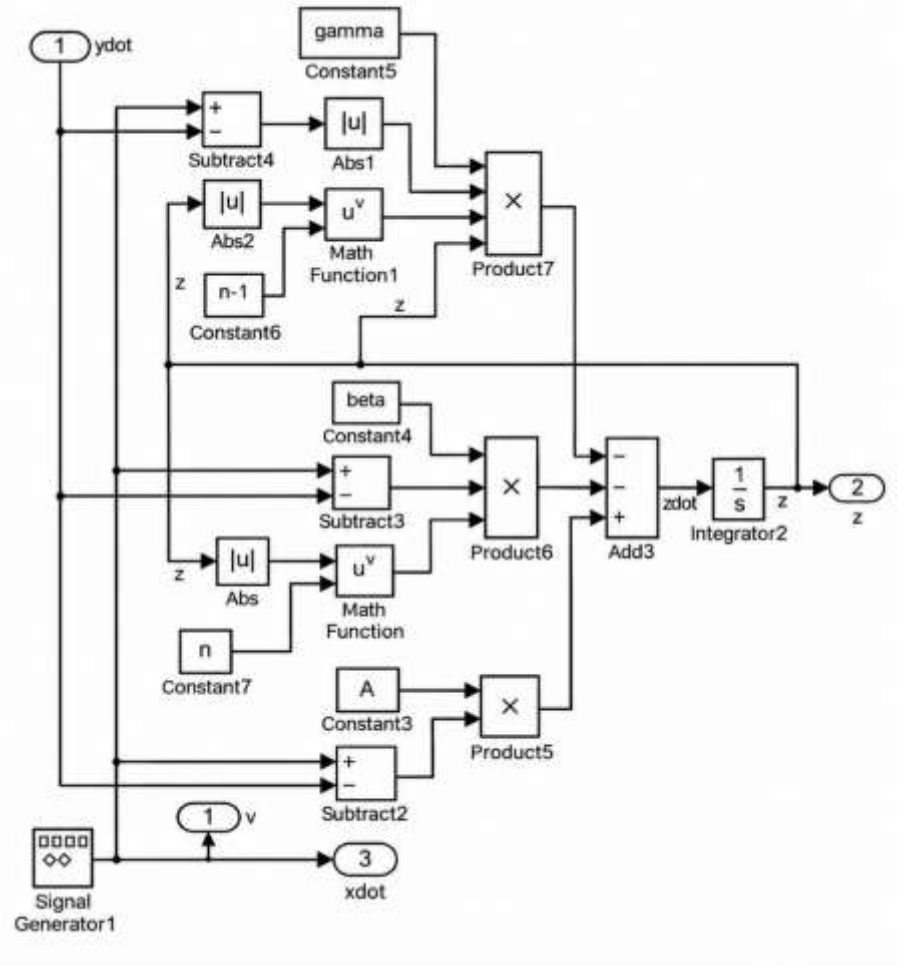

Figure 13: Subsystem for modified Bouc-Wen model hysteresis.

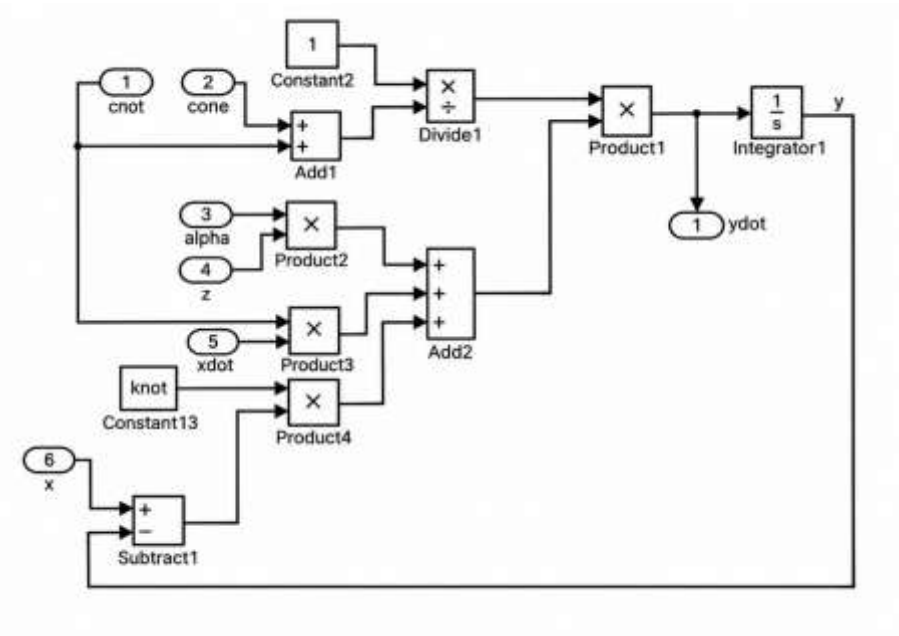

Figure 14: Subsystem of displacement, y for modified Bouc-Wen.

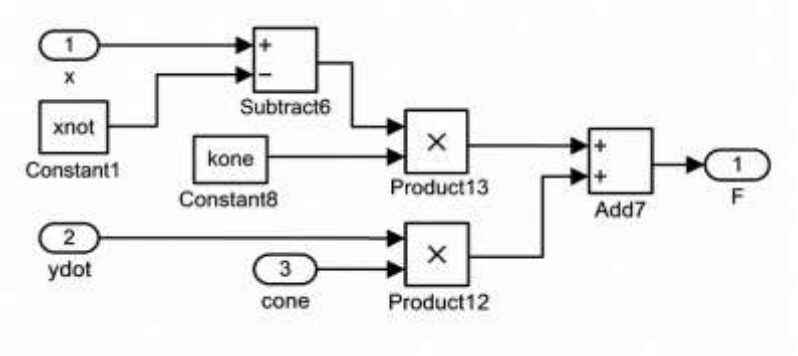

Figure 15: Subsystem of damping force, F for modified Bouc-Wen.

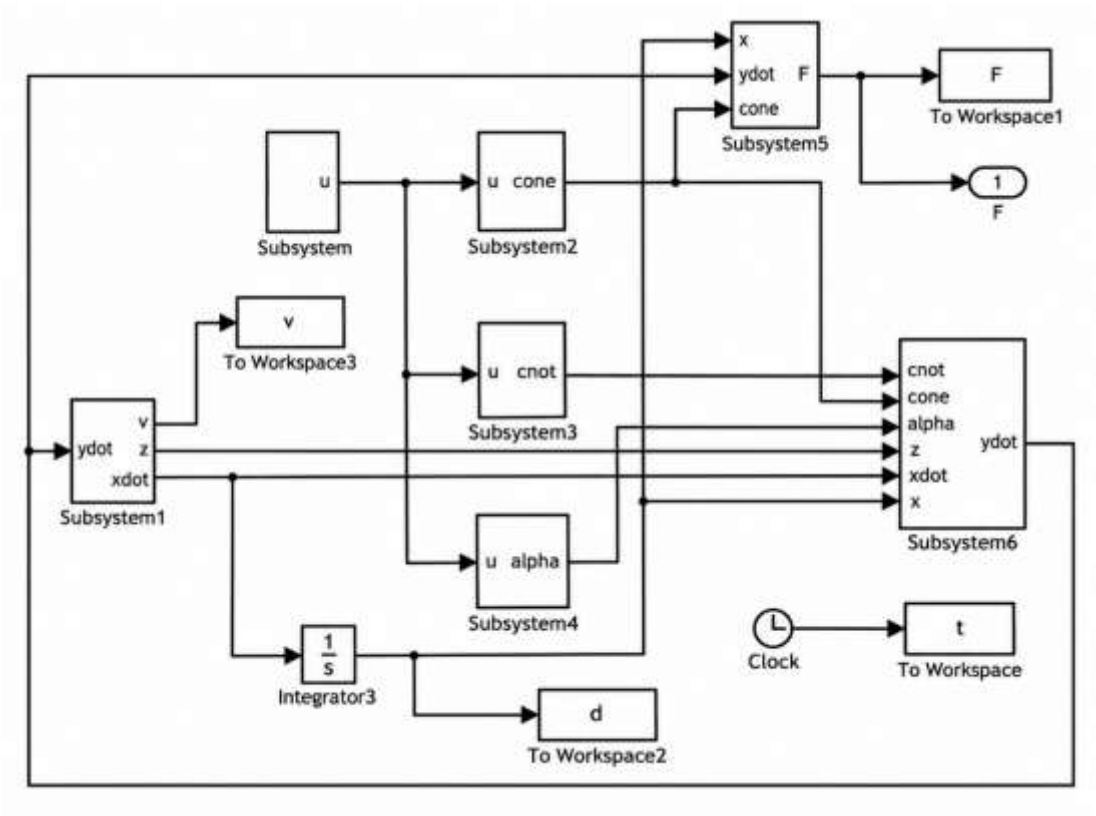

Figure 16: Complete modified Bouc-Wen Simulink model subsystem

Parameter Identification

By adjusting parameters of standard Bouc-Wen model ($\alpha_a, \alpha_b, c_{0a}, c_{0b}, k_{0a}, k_{0b}, \gamma, \beta, A, n, \eta$) and parameters of modified Bouc-Wen model ($\alpha_a, \alpha_b, c_{0a}, c_{0b}, c_{1a}, c_{1b}, k_0, k_1, \gamma, \beta, n, \eta$) through solving an optimization problem with an objective of fitting model response to the experimental data for a prototype MR damper, it is possible to predict the response of damper to any random inputs (displacement and applied current) before and after the yield areas. Table 1 below shows two set of identified parameters of Bouc-Wen and modified Bouc-Wen model for a cable-stayed bridge MR damper.

Table 1: Parameters of Bouc-Wen and modified Bouc-Wen cable-stayed bridge MR damper (8)

Parameter	Unit	Bouc-Wen	Modified Bouc-Wen
α_a	kN/m	26.0	46.2
α_b	kN/m/V	29.1	41.2
c_{0a}	kN s/m	105.4	110.0
c_{0b}	kN s/m/V	131.6	114.3
c_{1a}	kN s/m	-	8359.2
c_{1b}	kN s/m/V	-	7482.9
k_0	kN/m	-	0.002
k_{0a}	kN s/m	0.0014	-
k_{0b}	kN s/(m/V)	0.001	-
k_1	kN/m	-	0.0097
γ	m^{-2}	141.0	164.0
β	m^{-2}	141.0	164.0
A	-	2074.5	1107.2
n	-	2	2
η	s^{-1}	100	100

RESULT AND DISCUSSION

The result obtained by Simulink MATLAB model was presented for different value of their parametric condition based on Table 1 . These results showed favorable agreement with compare to past experimental testing by previous researcher. The technique used has therefore been shown to be a fast and precise system identification method, able to estimate the damping force under any desired combination of current, amplitude, and frequency of the excitation. Figure 17-19 illustrate the result obtained using MATLAB Simulink model for both BW and MBW model. Parameter used for below Bouc-Wen and modified Bouc-Wen model are for cable-stayed bridged of 200 kN to 1000 kN damping force.

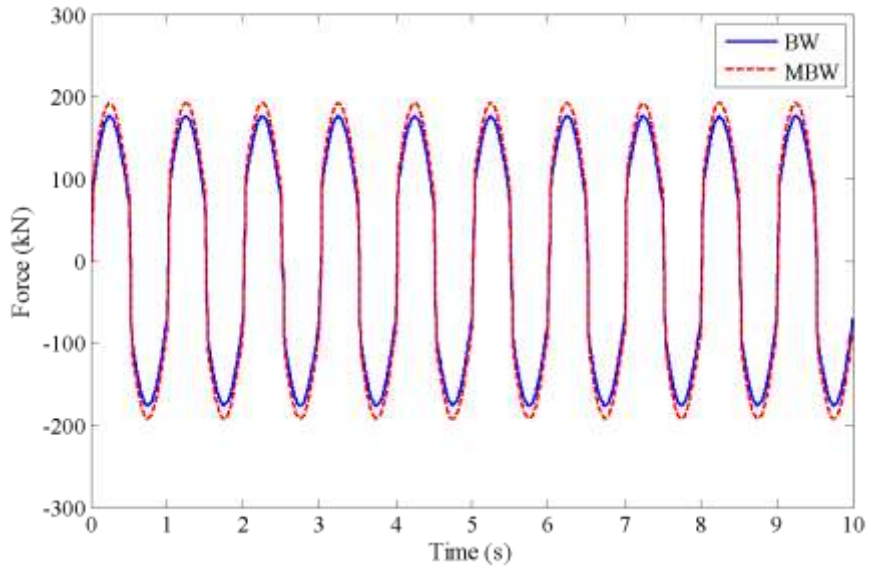

Figure 17: Graph of force (kN) versus time (s) for BW and MBW model.

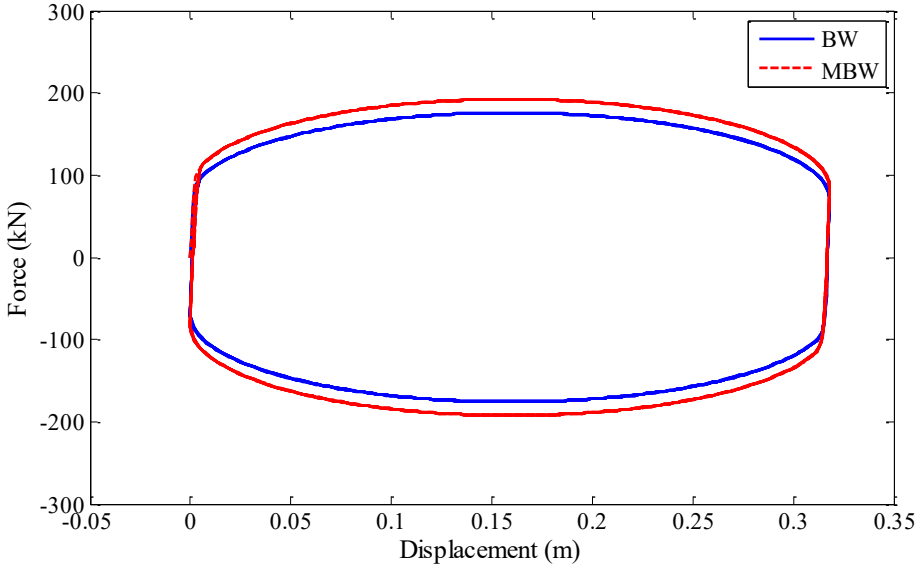

Figure 18: Graph of force (kN) versus displacement (m) for BW and MBW model.

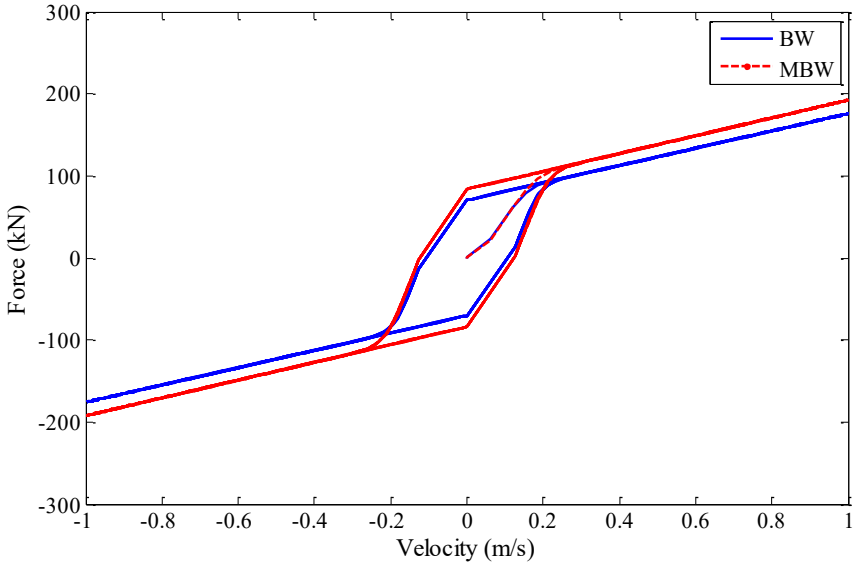

Figure 19: Graph of force (kN) versus velocity (m/s) for BW and MBW model.

Effect of Applied Current

By increasing current for this model, the force could increase from 200 kN to 800 kN in a range of displacement from 0 to 0.32 m as shown in Figure 20. Hysteresis behaviour of MR damper model becomes bigger when higher magnitude of current was applied as shown in Figure 21.

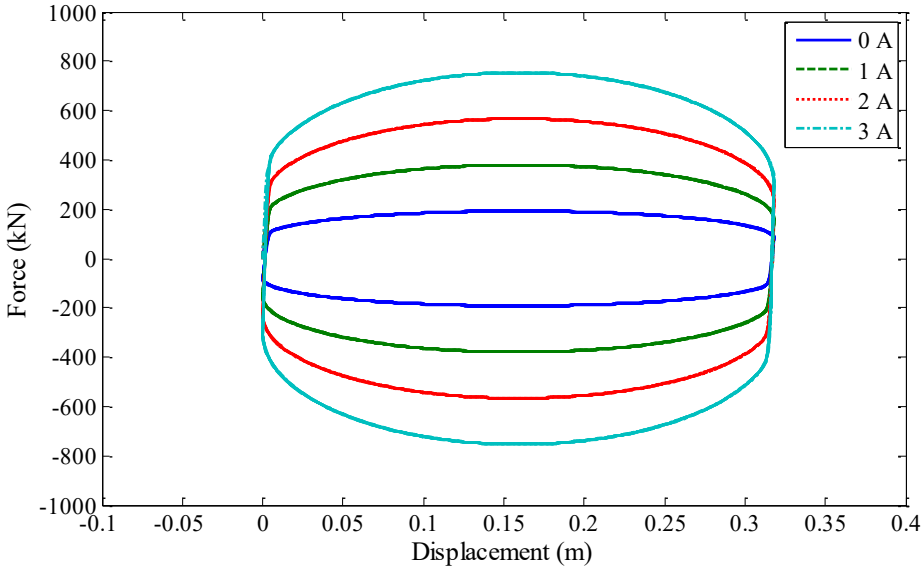

Figure 20: Graph of force (kN) versus displacement (m) for different magnitude of current (0A, 1A, 2A, 3A).

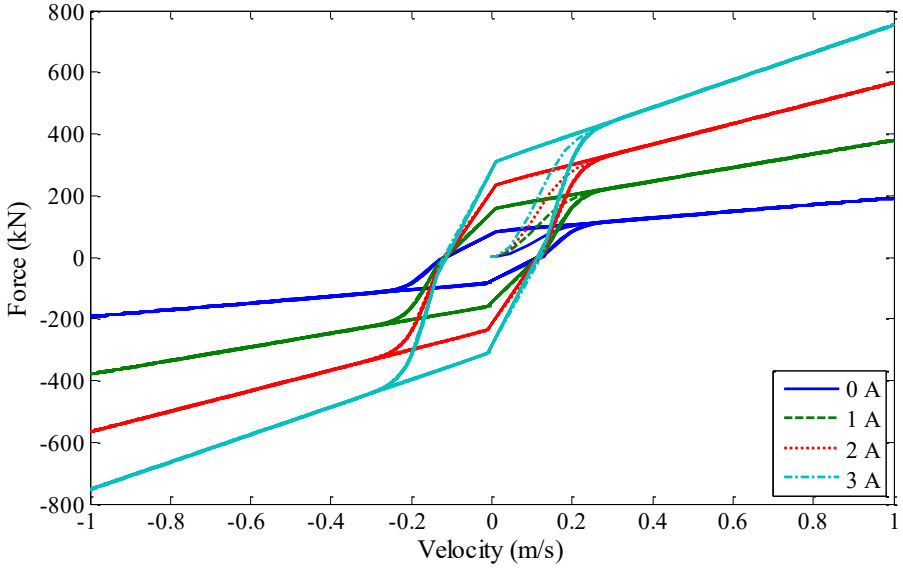

Figure 21: Graph of force (kN) versus velocity (m/s) for different magnitude of current (0A, 1A, 2A, 3A).

Effect of Parameters

Hysteresis behaviour of MR damper model becomes smaller when higher magnitude of γ was applied as shown in Figure 22. Hysteresis starts at -120 kN and finishes at 120 kN for γ, 164 m^{-2} while using γ, 464 m^{-2} hysteresis starts at smaller value of -70 kN and finishes at 70 kN.

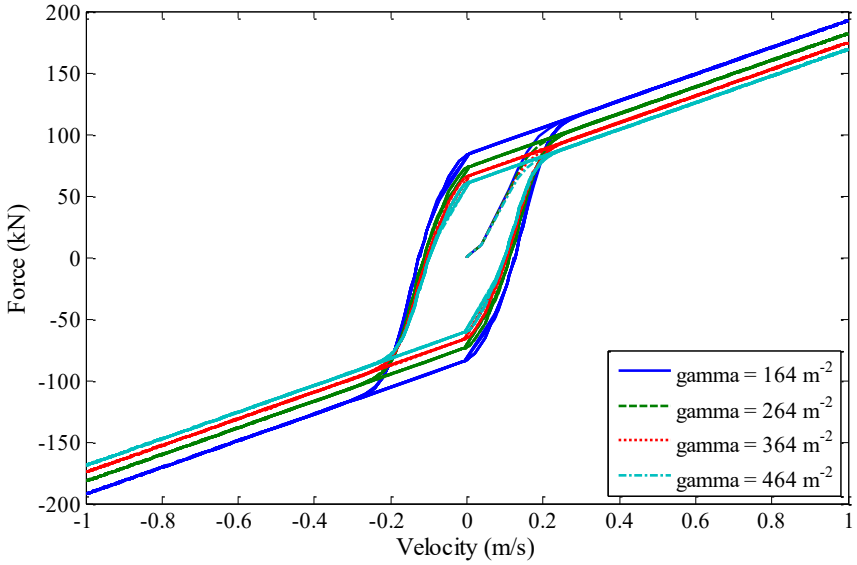

Figure 22: Graph of force (kN) versus velocity (m/s) for different magnitude of parameter γ (164 m^{-2}, 264 m^{-2}, 363 m^{-2}, 464 m^{-2}).

Hysteresis behaviour of MR damper model becomes smaller when higher magnitude of β was applied as shown in Figure 23. Hysteresis starts at -100 kN and finishes at 100 kN for β, 164 m^{-2} while using β, 464 m^{-2} hysteresis starts at smaller value of -70 kN and finishes at 70 kN.

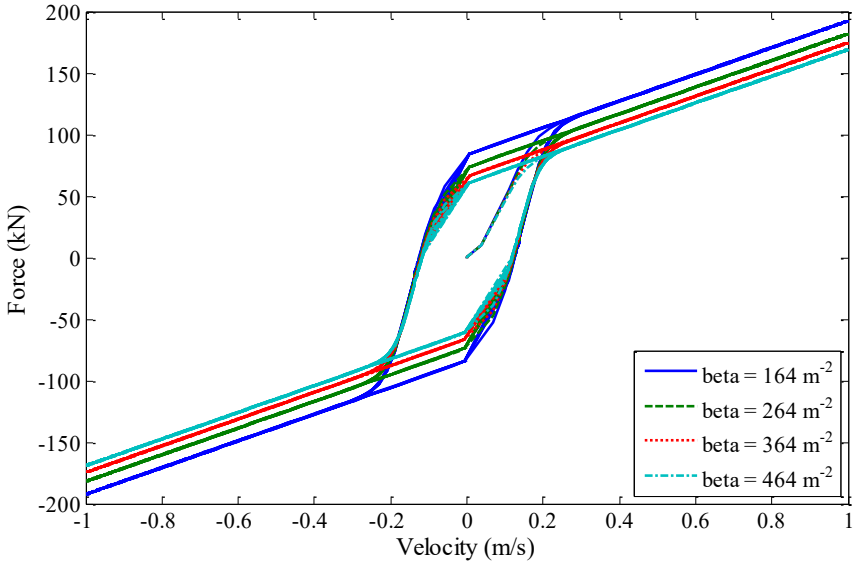

Figure 23: Graph of force (kN) versus velocity (m/s) for different magnitude of parameter β (164 m^{-2}, 264 m^{-2}, 363 m^{-2}, 464 m^{-2}).

Hysteresis behaviour of MR damper model becomes bigger when higher magnitude of A was applied as shown in Figure 24. Hysteresis starts at -100 kN and finishes at 100 kN for A, 1107.2 while using A, 1707.2 hysteresis starts at bigger value of -130 kN and finishes at 130 kN.

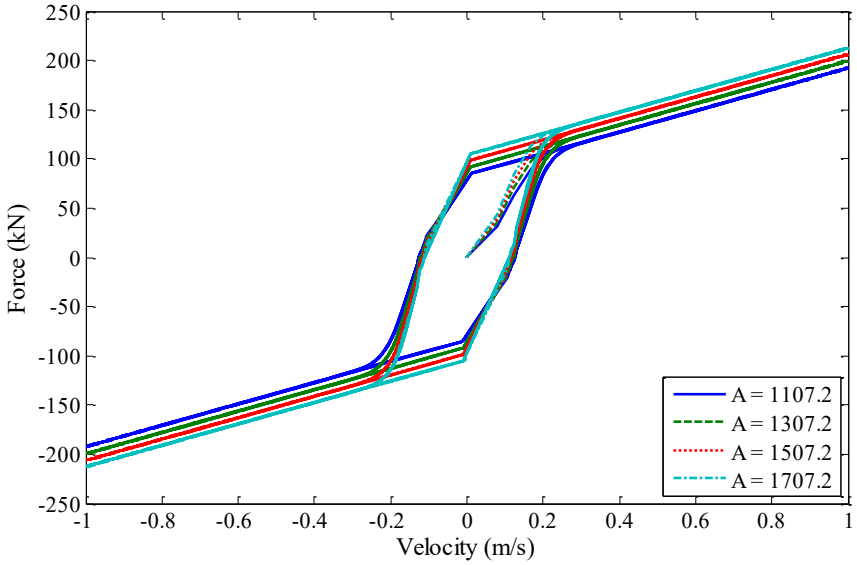

Figure 24: Graph of force (kN) versus velocity (m/s) for different magnitude of parameter A (1107.2, 1307.2, 1507.2, 1707.2).

Hysteresis behaviour of MR damper model becomes smaller when higher magnitude of A was applied as shown in Figure 25. Hysteresis starts at -130 kN and finishes at 100 kN for n, 2 while using n, 5 hysteresis starts at smaller value of -100 kN and finishes at 70 kN.

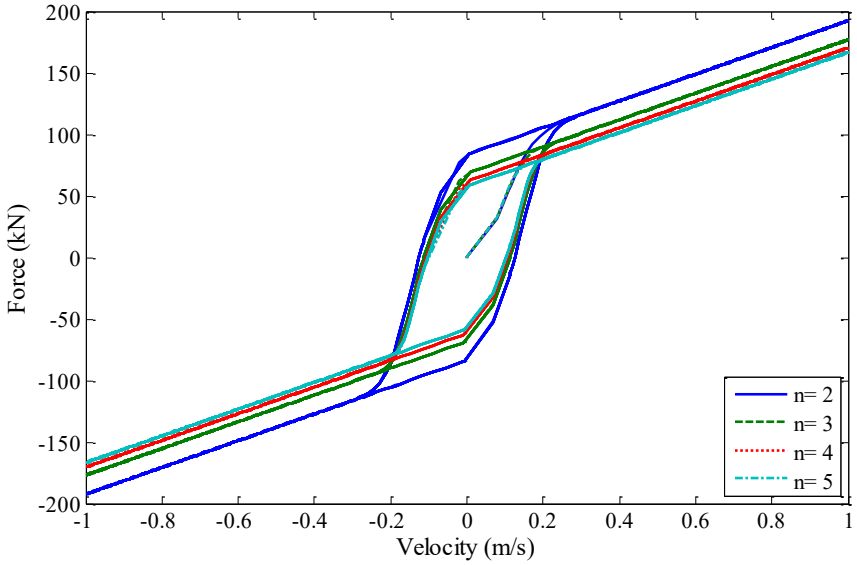

Figure 25: Graph of force (kN) versus velocity (m/s) for different magnitude of parameter n (2, 3, 4, 5)

Comprehensive analyses on the results obtained need more parameters variation for both Bouc-Wen and modified Bouc-Wen model. The hysteretic behaviour for modified Bouc-Wen follows the theoretical path compare to Bouc-Wen model. Therefore, it is important to study the relationship between all parameters used to understand the influence of each combination in the hysteretic shape.

Educational Application of the Simulation Models

The Bouc-Wen and modified Bouc-Wen simulation models could be utilized as additional learning material for mechanical engineering lessons especially for vibration, system dynamics, and mathematical modeling classes. While working in class or in the laboratory, students will be able to view the Simulink diagram and see how the governing differential equations are programmed mathematically and through integrator blocks.

In addition, the hysteresis loops of the force time, force displacement, and force velocity responses obtained through both models can now be compared. Lastly, the sensitivity analysis of the parameters presented in Figures 20–25 may be used to demonstrate the effect on the damping force and the hysteresis loop when varying the current and the parameters of the model.

Through this, the students can make connections between theoretical mathematical equations and simulation results. However, even though the proposed learning activities have not yet been tried out on students, the simulation models provide a good starting point for future classroom demonstrations and laboratory activities.

CONCLUSION

In this study, a parametric model of Bouc-Wen and Modified Bouc-Wen model of MR damper has been completely investigated. Simulink model for both Bouc-Wen and Modified Bouc-Wen model has been presented successfully. The result obtained by Simulink model was presented for different value of their parametric condition. These results showed favourable agreement with those obtained by both Bouc-Wen and modified Bouc-Wen model compare to past experimental testing by previous researcher. The technique used has therefore been shown to be a fast and precise system identification method, able to estimate the damping force under any desired combination of voltage, amplitude, and frequency of the excitation. Modified Bouc-Wen model is better than Bouc-Wen because of its capability to achieve precise force with parameter used.

The developed simulation models also demonstrate the potential of MATLAB/Simulink as an educational tool for understanding nonlinear hysteresis modelling. By comparing the Bouc–Wen and Modified Bouc–Wen models, mechanical engineering students can explore the relationship between mathematical equations, model parameters, and damping force responses. The simulation results provide visual examples that can support classroom demonstrations and laboratory exercises in vibration analysis and nonlinear system dynamics. However, this study was limited to numerical simulations without experimental validation or student learning assessments. Future research could focus on experimental model validation and evaluating the effectiveness of these simulation models in supporting engineering education.

ACKNOWLEDGMENT

The authors would like to express their sincere gratitude to Universiti Teknikal Malaysia Melaka (UTeM) for providing the facilities, resources, and institutional support throughout the completion of this research. The authors also wish to acknowledge the contributions and assistance of colleagues and technical staff who provided valuable support during the research activities.

REFERENCES

1. Mohd Yamin, A. H., Ab Talib, M. H., Mat Darus, I. Z., & Mohd Nor, N. S. (2022). Magneto-rheological (MR) damper – Parametric modelling and experimental validation for LORD RD 8040-1. Jurnal Teknologi. 84(2): 27-34.
2. Peng, L., Guo, Y., Li, Z., Mu, H., Shen, Y., Hua, D., Wu, J., Zhang, T., & Liu, X. (2026). Interpretable physics-guided modelling and energy-efficient disturbance-compensated control for magnetorheological suspensions of off-road vehicles. Mechanical Systems and Signal Processing. Vol 256, pp 114516.

3. Qian, R., Wang, G., Jiang, M., Zhang, Y., Zhai, R., & Wang, W. (2024). Frequency-dependent Bouc–Wen modelling of magnetorheological damper using harmonic balance approach. Actuators. Vol. 13(8), 297.
4. Li, Z., Yao, J., & Xu, Y. (2022). Research and application of a new method for adjusting the vehicle body height. PLOS ONE, 17(10),
5. Al-Araji, H. M. H., Al-Zughaibi, A. I. H., & Hussein, E. Q. (2023). Testing two types of magneto-rheological (MR) damper models with quarter car suspension system response. International Journal on Technical and Physical Problems of Engineering, 15(1), 52–61.
6. Tang, L. (2025). Hysteresis modeling, identification and control for magnetorheological actuators. Universitat de Girona. https://hdl.handle.net/10803/695890.
7. Du, J., Liu, M., Zhou, P., & Xiao, H. (2024). Semiactive control of nonlinear parametric vibration of super-long stay cable in cable-stayed bridge installed with magnetorheological fluid damper. Structural Control and Health Monitoring. 2024(1): 1-21.
8. Jung, H. J., Spencer, B. F., & Lee, I. W. (2003). Control of seismically excited cable-stayed bridge employing magnetorheological fluid dampers. Journal of Structural Engineering, 129(7), 873–883.
9. Ab Patar, M. N. A., Mat Jusoh, M. A., Le, C. H., Abdul Rahman, S. M., & Mahmud, J. (2024). Vibration simulation and analysis teaching tool (VSATT): An interactive learning tool based on MATLAB-Simulink GUI. International Journal of Academic Research in Progressive Education and Development, 13(4).
10. Negahban, A. (2024). Simulation in engineering education: The transition from physical experimentation to digital immersive simulated environments.100(7), 695–708.