Modelling and Analysis of Sensorless Permanent Magnet Synchronous Motor Using Fundamental Excitation

Jurifa Mat Lazi [1*], Siti Zahrah Anuar[1], Md Hairul Nizam Talib [1], Azrita Alias[1], Fazlli Patkar[1], Nurul Ain Said[1]

[1]Fakulti Teknologi dan Kejuruteraan Elektrik, Universiti Teknikal Malaysia Melaka, Melaka, Malaysia.

***Corresponding Author**

DOI: https://doi.org/10.47772/IJRISS.2026.101000253

Received: 19 October 2026; Accepted: 24 October 2026; Published: 01 November 2026

ABSTRACT

Permanent magnet synchronous motors (PMSMs) are widely used in high-performance drive applications owing to their high power density, efficiency, and dynamic response. However, conventional PMSM drives rely on shaft-mounted position sensors, which increase system cost and maintenance requirements. This paper presents the modelling and MATLAB/Simulink simulation of a sensorless PMSM drive using fundamental excitation and an adaptive speed estimator based on Popov's hyper-stability theory. The motor is modelled in the synchronously rotating d–q reference frame, with Clarke and Park transformations used to convert three-phase quantities. Space-vector pulse-width modulation (SVPWM) is employed for inverter switching. The drive is evaluated under forward and reverse speed commands at 500 rpm, 1000 rpm, and 1500 rpm. The simulation results show that the estimated rotor speed closely follows the reference and actual speed responses across the investigated operating conditions. The direct-axis current also remains close to zero during steady-state operation, indicating appropriate d–q current regulation. These findings support the feasibility of the proposed sensorless estimation approach within the simulated operating range. However, experimental validation and further testing under parameter variations, measurement noise, and load disturbances are required to assess its robustness and practical applicability.

Keywords: Permanent magnet synchronous motor; sensorless control; speed estimation; d–q modelling; space-vector pulse-width modulation

INTRODUCTION

Permanent magnet synchronous motors (PMSMs) are widely used in industrial drive applications because of their high-power density, high efficiency, favourable torque-to-inertia ratio, and fast dynamic response. These characteristics make PMSMs suitable for applications requiring precise speed regulation and high-performance motion control [6], [7]. Unlike conventional motors that require rotor excitation windings, a PMSM uses permanent magnets to establish the rotor magnetic field. Its performance can be improved through appropriate modelling and control strategies, particularly field-oriented control (FOC), which enables independent regulation of the direct-axis and quadrature-axis current components. Space-vector pulse-width modulation (SVPWM) is commonly employed to generate inverter switching signals and improve DC-link voltage utilisation [4], [10]. Mathematical modelling and simulation are therefore important for analysing PMSM behaviour and evaluating the performance of different control strategies before practical implementation [2], [11].

Accurate rotor-position and speed information is essential for effective FOC operation. Conventionally, this information is obtained using mechanical sensors, such as encoders and resolvers. Although these sensors provide direct feedback, they can increase system cost, installation complexity, and maintenance requirements. Their presence may also affect the reliability of the overall drive system. Sensorless control has consequently attracted considerable research interest because it estimates rotor position and speed from electrical measurements and a mathematical motor model, reducing the need for mechanical position sensors [3], [5], [8]. Previous studies have investigated different estimation techniques, including adaptive speed estimation,

extended Kalman filtering, and sliding-mode-based approaches [1], [2], [9], [13]. However, the performance of these techniques depends on the estimation algorithm, motor parameters, operating conditions, and characteristics of the drive system.

Existing literature classifies PMSM sensorless control methods into several major categories, including model-based observers, saliency-based methods, and signal-injection techniques. Model-based methods estimate rotor

position or speed using electrical quantities and the mathematical representation of the motor, whereas saliency-based and signal-injection methods exploit variations in machine characteristics to obtain rotor-position information. Each approach has specific advantages and limitations over different operating-speed ranges [12], [14], [15]. Recent reviews have also highlighted challenges associated with estimation accuracy, parameter variations, low-speed operation, and robustness under changing operating conditions [12], [13], [15]. These challenges indicate the importance of developing and evaluating sensorless estimation schemes that are compatible with the selected motor model and control structure. In particular, fundamental-frequency-based estimation approaches remain relevant for PMSM drives operating within an appropriate speed range [15].

In response to these considerations, this study investigates the modelling and simulation of a sensorless PMSM drive using fundamental excitation and an adaptive speed estimator based on Popov's hyper-stability theory. The PMSM is represented in the synchronously rotating d–q reference frame, while Clarke and Park transformations are used to convert three-phase electrical quantities into the corresponding reference frame. The adaptive estimator utilises the difference between the modelled and estimated d–q current responses to generate an estimation error, which is processed through a proportional–integral (PI) controller to update the estimated rotor speed. SVPWM is employed for inverter switching, and the complete drive system is implemented in MATLAB/Simulink.

The performance of the proposed drive model is evaluated under forward and reverse speed commands at 500 rpm, 1000 rpm, and 1500 rpm. The analysis focuses on the tracking relationship between the reference, actual, and estimated speeds, together with the d–q and three-phase stator-current responses. Through these simulations, the study aims to assess the feasibility of the adaptive estimation scheme under the investigated operating conditions. The findings provide a basis for further development of sensorless PMSM drive systems, while experimental validation and additional testing under parameter variations and load disturbances remain necessary to establish practical robustness.

SENSORLESS CONTROLLER FOR PMSM DRIVES

A. Modelling of PMSM Drives

The mathematical model of the PMSM is expressed in the synchronously rotating d–q reference frame as follows.

$$v_{dA} = r_{sA} i_{dA} + \frac{d}{dt}\varphi_{dA} - \omega_e \varphi_{qA} \qquad (1)$$

$$v_{qA} = r_{sA} i_{qA} + p\varphi_{qA} - \omega_e \varphi_{dA} \qquad (2)$$

Where

v_d, v_q = *d-q* axis voltage

i_d, i_q = *d-q* axis currents

ω_e = electrical speed of motor

r_s = stator resistance

φ_d,φ_d = d-q axis flux linkages

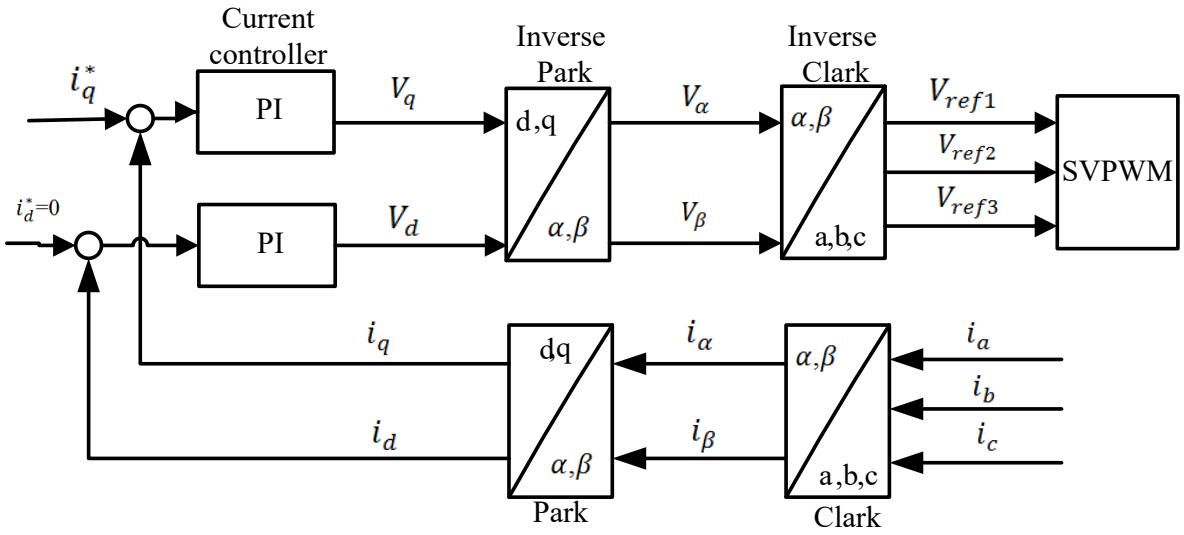

Figure 1. Current controller and coordination block diagram.

The flux linkage can be expressed in the form of constant flux linkage φ_m and stator current due to rotor permanent magnet as in (3) (4):

$$\varphi_{dA} = L_{dA} i_{dA} + \varphi_{mA} \quad (3)$$

$$\varphi_{qA} = L_{qA} i_{qA} \quad (4)$$

Where

L_d, L_q = d-q axis inductances

Substituting (3) and (4) into (1) and (2) gives the voltage equations in (5) and (6).

$$v_{dA} = r_{sA} i_{dA} + L_{dA} \frac{d}{dt} i_{dA} - \omega_e L_{qA} i_{qA} \quad (5)$$

$$v_{qA} = r_{sA} i_{qA} + L_{qA} \frac{d}{dt} i_{qA} + \omega_e L_{dA} i_{dA} + \omega_e \varphi_{mA} \quad (6)$$

The electromagnetic torque is expressed as

$$T_{em\,A} - T_{LA} = J \frac{d\theta_A}{dt} \quad (7)$$

With

$$T_{em\,A} = \frac{3}{2} p \times real\,\{i_A \varphi_{rA}\} \quad (8)$$

The instantaneous angular position is:

$$\omega_{rA} = \frac{d\theta_A}{dt} \quad (9)$$

Whereas the stator current space vector with respect to the stationary phase magnetic axes is defined as:

$$i_s = i_s e^{j\emptyset} \quad (10)$$

Assuming that the permanent-magnet flux linkage is constant, electromagnetic torque can be controlled by adjusting the magnitude and phase of the stator current. For a surface-mounted PMSM under the usual

simplifying assumptions, torque is primarily controlled by the q-axis current, while the d-axis current is typically regulated near zero.

B. Speed and Position Estimator using adaptive controller

The adaptive estimator is designed to estimate rotor speed. First, the three-phase voltages and currents are transformed into the d–q reference frame using the Clarke and Park transformations, as illustrated in Fig. 2. The transformation is represented by (11).

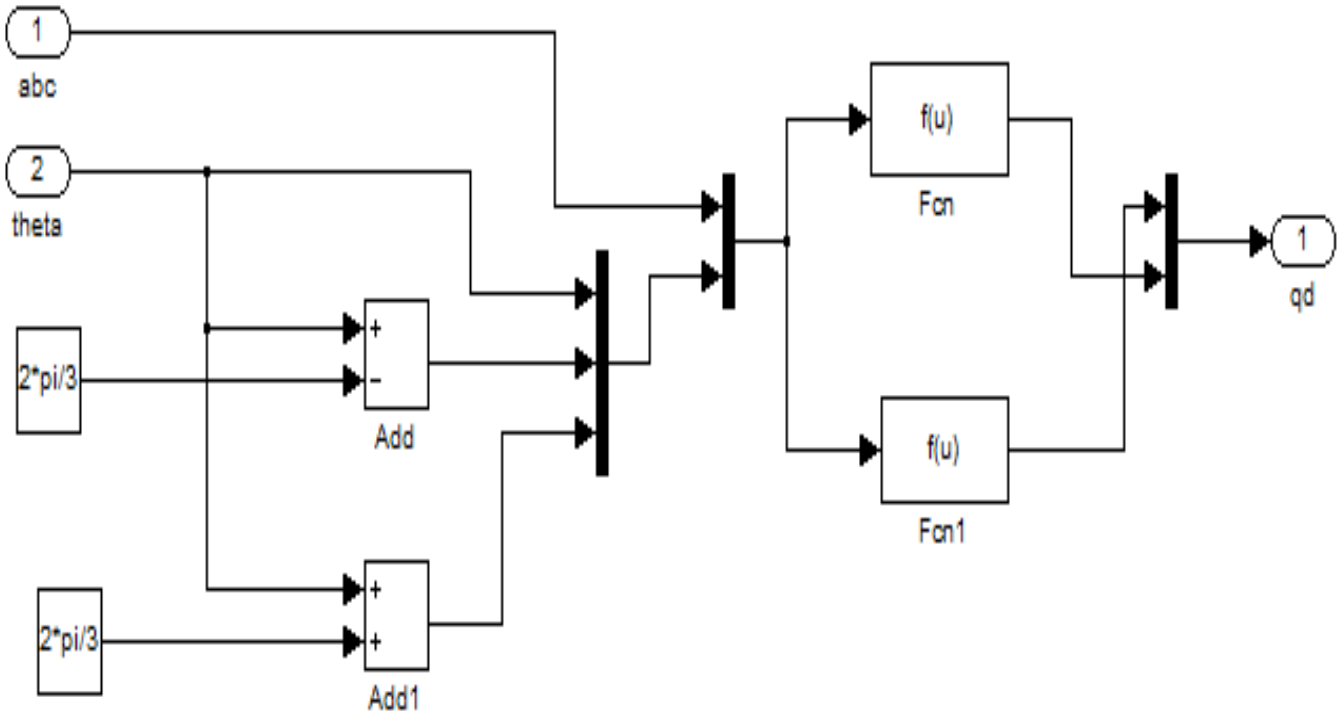

Figure 2. Clarke and Park transformation block diagram.

$$\begin{bmatrix} id \\ iq \end{bmatrix} = \frac{2}{3} \begin{bmatrix} \cos\theta & \cos\left(\theta - \frac{2\pi}{3}\right) & \cos\left(\theta + \frac{2\pi}{3}\right) \\ -\sin\theta & -\sin\left(\theta - \frac{2\pi}{3}\right) & -\sin\left(\theta + \frac{2\pi}{3}\right) \end{bmatrix} \begin{bmatrix} iA \\ iB \\ iC \end{bmatrix} \qquad (11)$$

Then the d-q current and voltage are used in equation (12) and (13) which is formulated from equation (5) and (6).

$$\frac{d}{dt}\hat{i}_d = \frac{(V_d^* - r_s\hat{i}_d + \hat{\omega}_e L_q \hat{i}_q)}{L_d} \qquad (12)$$

$$\frac{d}{dt}\hat{i}_q = \frac{(V_q^* - r_s\hat{i}_q - \hat{\omega}_e L_d \hat{i}_d - \hat{\omega}_e \varphi_m)}{L_q} \qquad (13)$$

The estimated d–q currents are compared with the corresponding currents calculated from the PMSM model. The resulting estimation error is used to update the speed estimate according to Popov's hyper-stability theory, as represented by (14).

$$\hat{\omega}_e = \left(K_p \times \frac{K_i}{3}\right) g \qquad (14)$$

$$g = \left(i_d \times \hat{i}_q\right) - \left(i_q \times \hat{i}_d\right) - \frac{\varphi_m}{L}\left(i_q \times \hat{i}_q\right) \qquad (15)$$

The estimation error in (15) arises when the speed used by the model differs from the actual rotor speed. A proportional–integral (PI) controller regulates this error and provides the tuning signal for the estimator. The speed-estimator block diagram is shown in Fig. 3.

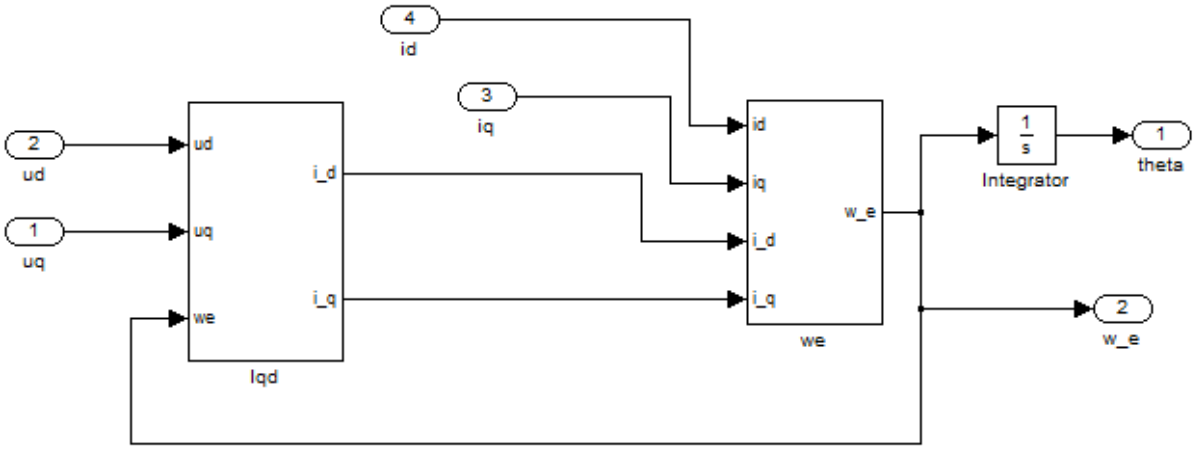

Figure 3. Block diagram of the speed estimator.

SIMULATION RESULTS

The MATLAB/Simulink model of the sensorless PMSM drive is shown in Figure 4. The motor parameters used in the simulation are listed in Table 1.

Table 1. PMSM parameters used in the simulation.

Motor Specification	Value
Resistance	4.33Ω
Flux linkage	0.194925 Wb
DC Voltage	300 V
Inductance	17.6mH
Inertia	0.000881kgm^2
Pole Pair	4
Friction Factor	0.0003Nms

Table 1 presents the PMSM parameters used in the MATLAB/Simulink simulation, including resistance, flux linkage, inductance, inertia, and pole pairs. These parameters are used to represent the motor characteristics in the simulation model.

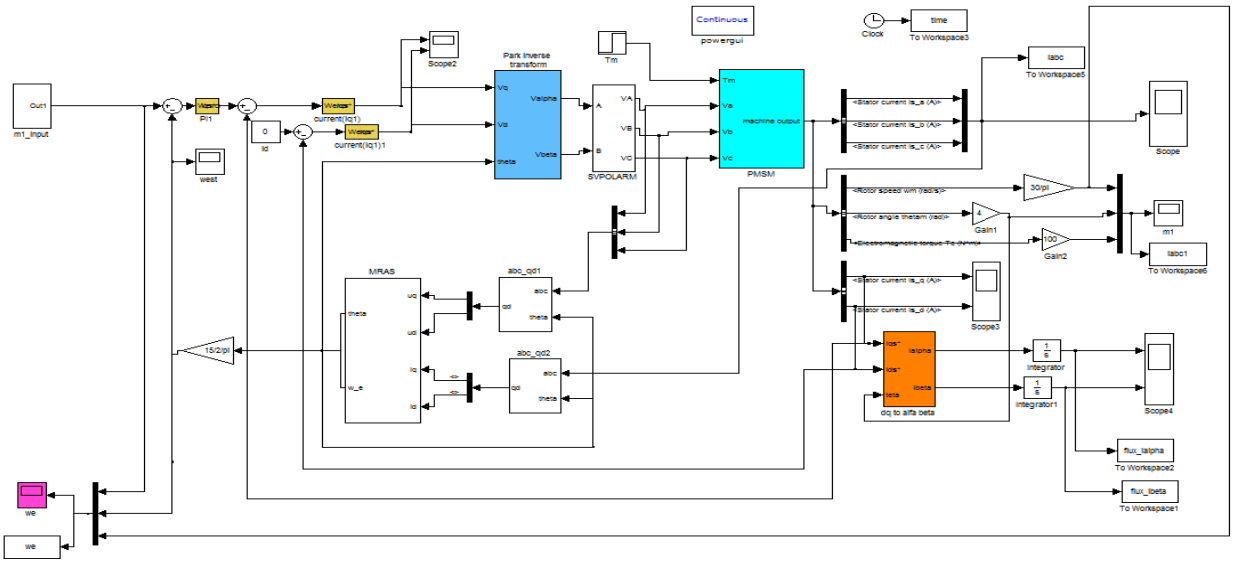

Figure 4. MATLAB/Simulink model of the sensorless PMSM drive

Figure 4 illustrates the MATLAB/Simulink model of the sensorless PMSM drive, incorporating the motor model, SVPWM inverter, coordinate transformations, and adaptive speed estimation components. The model is used to investigate the speed and current responses under different operating conditions.

A. Operation at 500 rpm

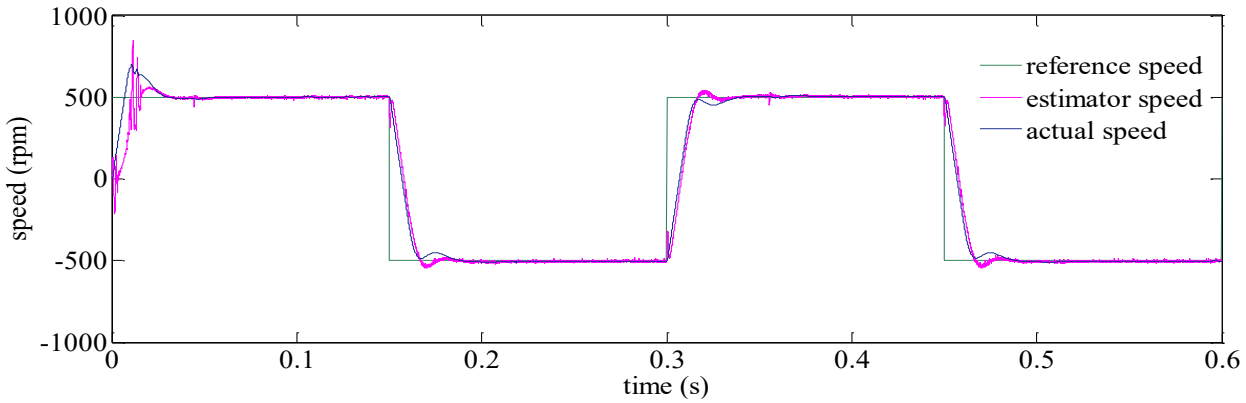

(a)

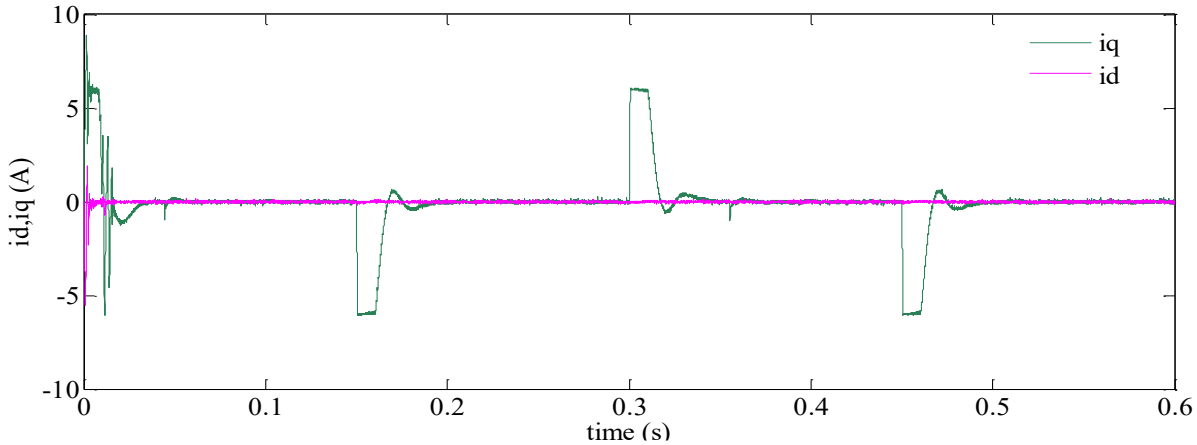

(b)

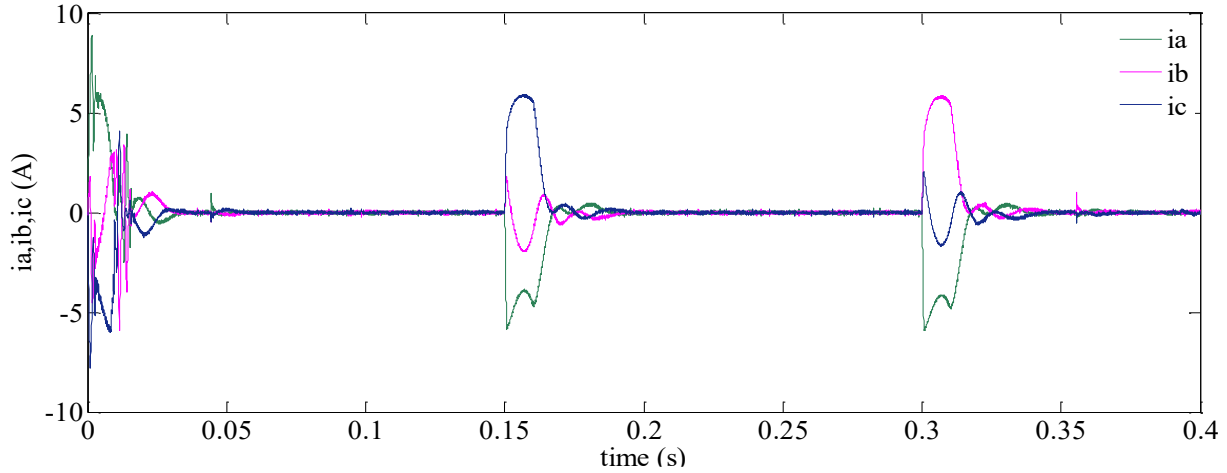

(c)

Figure 5. Simulated PMSM responses under ±500 rpm speed commands: (a) speed responses, (b) d–q axis currents, and (c) three-phase stator currents.

Figure 5 illustrates the simulated PMSM responses under forward and reverse speed commands of ±500 rpm. As shown in Figure 5(a), the estimated speed closely follows the reference and actual speeds, with transient deviations occurring during speed transitions. Figure 5(b) shows that the direct-axis current i_d remains close to zero during steady-state operation, while the quadrature-axis current i_q changes during speed reversal. The three-phase stator currents in Figure 5(c) exhibit transient variations during these transitions before settling towards steady-state values. Overall, the results demonstrate satisfactory speed-tracking performance of the sensorless PMSM drive under the simulated ±500 rpm operating conditions.

B. Operation at 1000 rpm

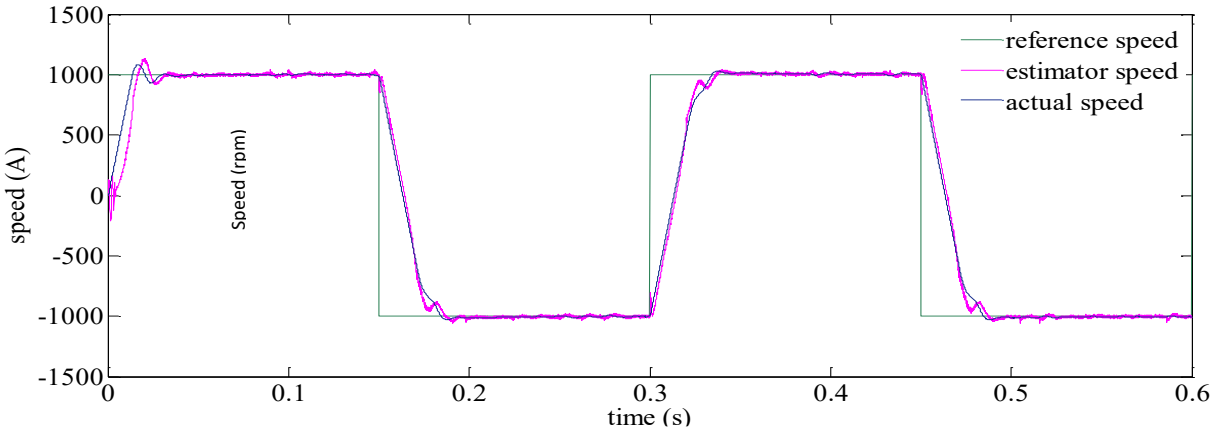

(a)

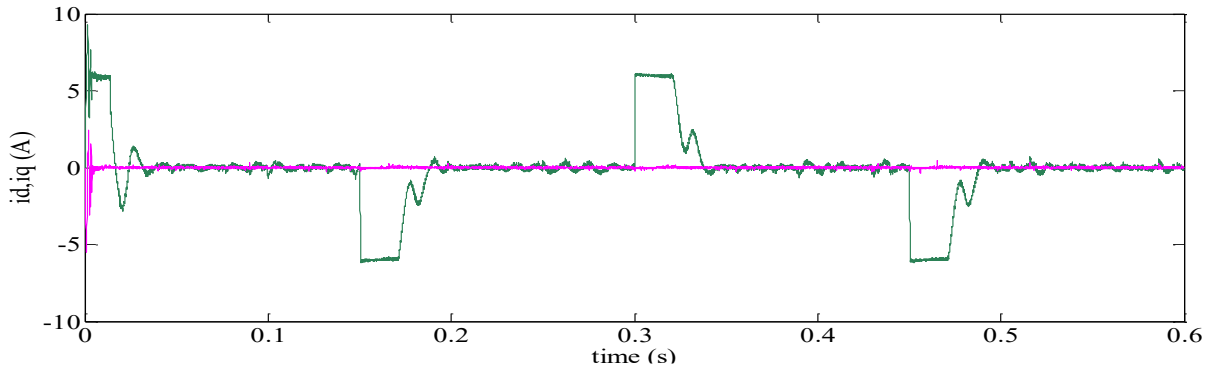

(b)

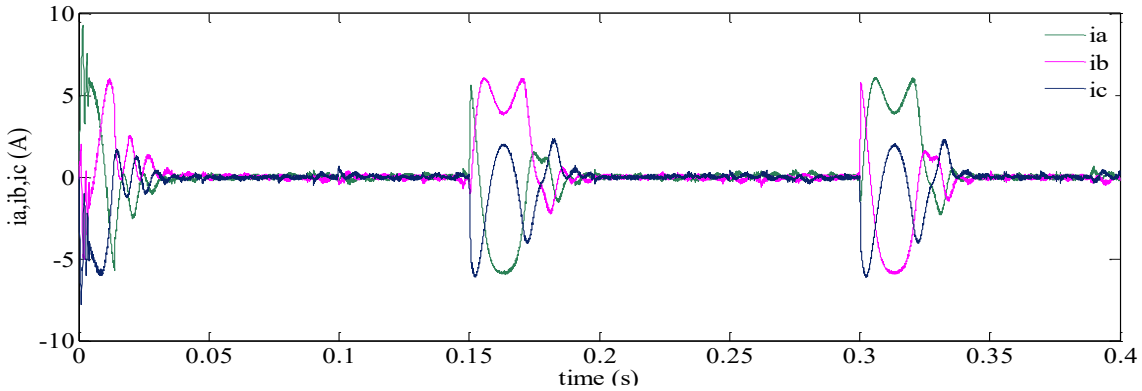

(c)

Figure 6. Simulated PMSM responses under ±1,000 rpm speed commands: (a) speed responses, (b) d–q axis currents, and (c) three-phase stator currents.

Figure 6 illustrates the simulated PMSM responses under forward and reverse speed commands of ±1,000 rpm. As shown in Figure 6(a), the estimated speed closely follows the reference and actual speeds, with transient deviations during speed transitions. Figure 6(b) shows that the direct-axis current i_d remains close to zero, while the quadrature-axis current i_q changes in response to speed reversal. The three-phase stator currents in Figure 6(c) exhibit transient oscillations during speed transitions before returning towards steady-state operation. Overall, the results indicate satisfactory speed-tracking performance of the sensorless PMSM drive at the simulated ±1,000 rpm operating condition.

C. Operation at 1500 rpm

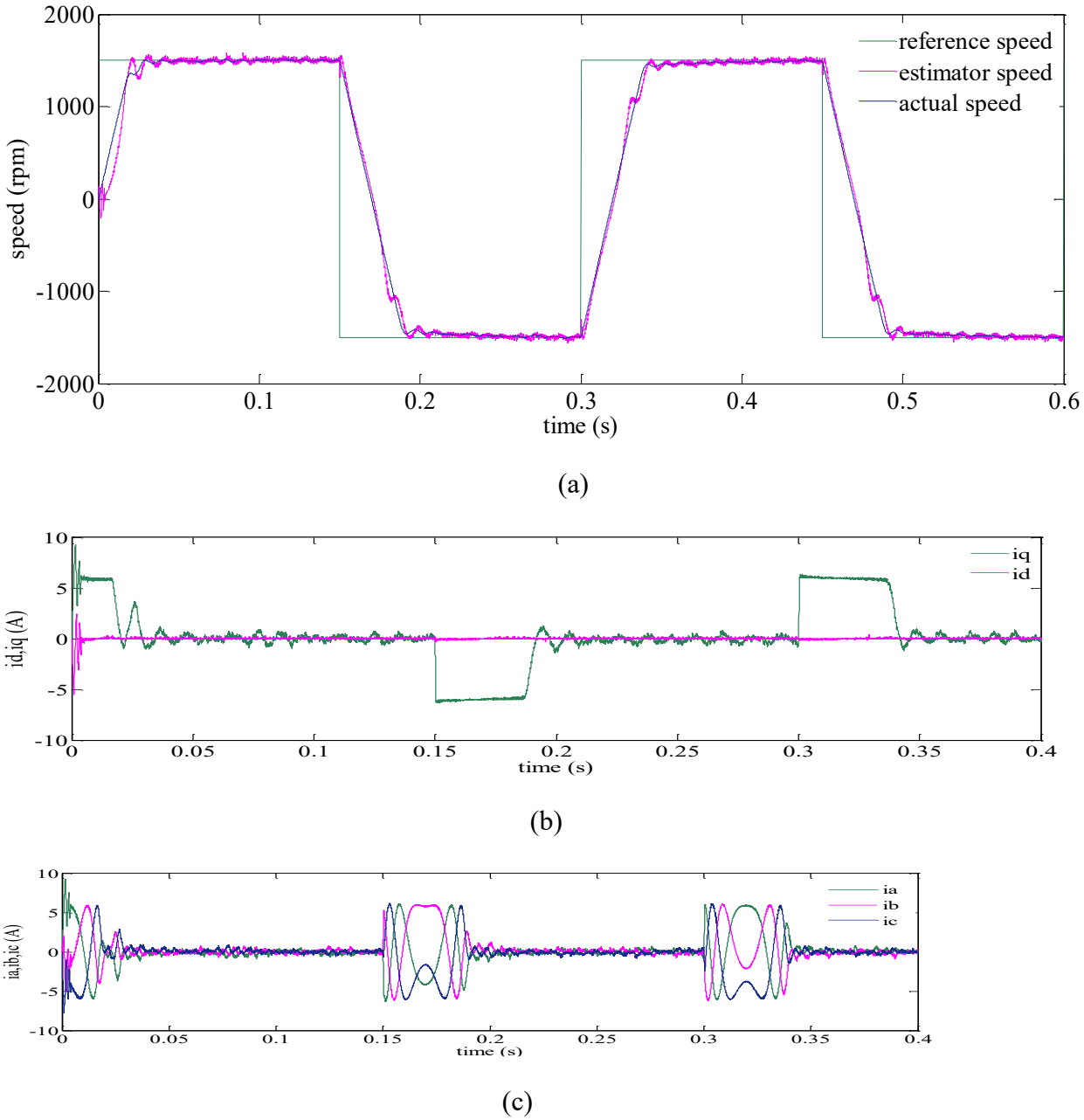

Figure 7. Simulated PMSM responses under ±1,500 rpm speed commands: (a) speed responses, (b) d–q axis currents, and (c) three-phase stator currents.

Figure 7 illustrates the simulated PMSM responses under forward and reverse speed commands of ±1,500 rpm. As shown in Figure 7(a), the estimated speed closely follows the reference and actual speeds, with transient deviations during speed transitions. Figure 7(b) shows that the direct-axis current i_d remains close to zero during steady-state operation, while the quadrature-axis current i_q changes with the speed command. The three-phase stator currents in Figure 7(c) exhibit transient oscillations during speed transitions before returning towards

steady-state operation. Overall, the results indicate satisfactory speed-tracking performance of the sensorless PMSM drive at the simulated ±1,500 rpm operating condition.

CONCLUSION

This study presented the modelling and MATLAB/Simulink simulation of a sensorless PMSM drive using fundamental excitation and an adaptive speed estimator based on Popov's hyper-stability theory. The simulation results demonstrated that the estimated rotor speed closely followed the reference and actual speed responses at 500 rpm, 1,000 rpm, and 1,500 rpm under forward and reverse operating conditions. The direct-axis current remained close to zero during steady-state operation, indicating appropriate d–q current regulation. These results support the feasibility of the proposed sensorless estimation approach within the investigated operating range. By eliminating the need for a shaft-mounted position sensor, the approach also offers the potential to reduce system cost, installation complexity, and maintenance requirements. However, the present evaluation is limited to simulation. Further investigations involving experimental validation, parameter variations, measurement noise, and load disturbances are necessary to assess the robustness and practical applicability of the proposed method.

REFERENCES

1. Yoon-Seok Han; Jung-Soo Choi; Young-Seok Kim, "Sensorless PMSM drive with a sliding mode control based adaptive speed and stator resistance estimator," in Magnetics, IEEE Transactions on , vol.36, no.5, pp.3588-3591, Sep 2000.
2. Ying-Shieh Kung; Nguyen Trung Hieu, "Simulink/Modelsim co-simulation of EKF-based sensorless PMSM drives," in Power Electronics and Drive Systems (PEDS), 2013 IEEE 10th International Conference on , vol., no., pp.709-713, 22-25 April 2013.
3. J. M. Lazi, Z. Ibrahim, SitiNoormiza Mat Isa, A. Anugerah, F. A. Patakor and R. Mustafa, "Sensorless speed control of PMSM drives using dSPACE DS1103 board," *Power and Energy (PECon), 2012 IEEE International Conference on*, Kota Kinabalu, 2012, pp. 922-927.
4. Prasad, E., B. Suresh, and K. Raghuveer. "Field Oriented Control of PMSM Using SVPWM Technique." Global Journal of Advanced Engineering Technologies 1.2 (2012): 39-45.
5. Perera, PD Chandana. Sensorless control of permanent-magnet synchronous motor drives. Diss. AALBORG UNIVERSITY AALBORG, 2002.
6. R. Krishnan, Electric Motor Drives Modeling, Analysis, and Control Pearson Education, 2001.
7. Pillay, Pragasen, and Ramu Krishnan. "Modeling, simulation, and analysis of permanent-magnet motor drives. I. The permanent-magnet synchronous motor drive." Industry Applications, IEEE Transactions on 25.2 (1989): 265-273.
8. Chi, Song. Position-sensorless control of permanent magnet synchronous machines over wide speed range. Diss. The Ohio State University, 2007.
9. Urbanski, Konrad. "Sensorless control of PMSM high dynamic drive at low speed range." Industrial Electronics (ISIE), 2011 IEEE International Symposium on. IEEE, 2011.
10. Jung, J. I. N. W. O. O., and P. H. DStudent. "Project# 2 Space Vector PWM Inverter." 2005, The Ohio State University (2005).
11. Arroyo, Enrique L. Carrillo. Modeling and simulation of permanent magnet synchronous motor drive system. Diss. University Of Puerto Rico Mayagüez Campus, 2006
12. Wang, X., et al. (2023). Overview of position-sensorless technology for permanent magnet synchronous motor systems. World Electric Vehicle Journal, 14(8), 212.
13. Liu, X., Wang, Z., Wang, W., Lv, Y., Yuan, B., Wang, S., Li, W., Li, Q., Zhang, Q., & Chen, Q. (2022). SMO-based sensorless control of a permanent magnet synchronous motor. Frontiers in Energy Research, 10, 839329.
14. Benevieri, A., Carbone, L., Cosso, S., Kumar, K., Marchesoni, M., Passalacqua, M., & Vaccaro, L. (2022). Surface permanent magnet synchronous motors' passive sensorless control: A review. Energies, 15(20), 7747.
15. Q. An, M. Zhao, Y. Lu, H. Wang, S. Zhu, and X. Zhang, "Development and New Challenges of Sensorless Control for Permanent Magnet Synchronous Motors," *Energies*, vol. 19, no. 4, Art. no. 1112, 2026.