Conceptual Design and Software Simulation of an Automated Control Unit for Off-Grid Hybrid Solar-Pumped Storage Hydropower Systems

Muhammad Rafiq Rahim[1], Mohamad Naim Mohd Nasir[1]*, Zul Hasrizal Bohari[1], Nurul Ashikin Mohd Rais[1], Ahmad Zaidi Abdullah[2]

[1]Faculty of Electrical Technology and Engineering, Universiti Teknikal Malaysia Melaka, 76100, Durian Tunggal, Melaka, Malaysia

[2]Faculty of Engineering & Electrical Technology, Universiti Malaysia Perlis, Malaysia.

DOI: https://doi.org/10.47772/IJRISS.2026.101000346

Received: 20 October 2026; Accepted: 25 October 2026; Published: 02 November 2026

ABSTRACT

Many remote and rural communities around the world still do not have a reliable supply of electricity. Solar photovoltaic (PV) systems are popular for off-grid power, but they cannot produce electricity continuously because sunlight changes throughout the day. Using traditional chemical batteries to store extra solar power is common, but batteries are expensive to replace, have a short lifespan in hot weather, and create toxic waste when discarded. To solve these problems, this study proposes an automated control unit for a small, standalone hybrid Solar PV and Pumped Storage Hydropower (PSH) "water battery" system which acts as a small-scale demonstrator relative to the battery buffer to verify control logic. During the day, extra power from solar panels runs a water pump to move water from a lower tank to a higher tank, storing energy as potential water power. At night or on cloudy days, the stored water is released to turn a hydro turbine generator to power DC electrical loads. The digital control system uses a Finite State Machine (FSM) program written in Arduino C++ and was tested using Proteus 8 simulation software. The system automatically switches between pumping and generation modes with overflow and dry-run cut-off protection. It also cleans sensor noise, keeps real-time clock timestamps, and saves system data to an SD card while displaying status on LCD screens. The simulation results show that the automated controller works reliably, switches modes smoothly without power interruptions, and can manage off-grid energy storage without human help.

Keywords: Hybrid Energy Systems, Solar Photovoltaic, Pumped Storage Hydropower, Off-Grid Electrification, Proteus Simulation

INTRODUCTION

Access to reliable electricity is very important for daily life, education, healthcare, and economic growth in rural areas [1]. However, recent global tracking reports show that approximately 675 million people worldwide still lack access to electricity, with most living in remote rural communities [1]. Connecting these isolated areas to the main electrical power grid is very difficult and expensive because of long distances and difficult terrain [1], [2]. To help solve this problem, small off-grid solar photovoltaic (PV) systems are widely used [2], [3]. Solar panels are clean and quiet, but they depend heavily on the weather and sunlight [1], [4]. Solar power cannot produce steady electricity continuously because night comes every day and clouds block the sun [5], [6]. Therefore, off-grid solar systems need an energy storage system to save extra power for later use [5], [6].

Usually, chemical batteries such as lead-acid or lithium-ion batteries are used to store extra solar power [5], [7]. However, using batteries in remote rural places creates several major problems [5], [7], [8]. First, batteries break down over time and need to be replaced every few years, which creates a high financial burden for poor communities [5], [7]. Second, in hot tropical weather, batteries degrade and fail much faster [7], [8]. Third, remote villages usually lack proper recycling facilities, meaning old batteries are thrown away and can leak harmful chemical waste into the environment [5], [7]. A small Pumped Storage Hydropower (PSH) system can act as a "water battery" to replace or reduce chemical batteries [5], [6], [9]. During the day, surplus solar power

runs a pump to elevate water into a high storage tank, converting electrical energy into stored gravitational potential energy [1], [6]. At night or during cloudy periods, the stored water flows down through a penstock to spin a hydro turbine and generate electricity again [1], [6], [10].

However, combining solar power generation and water storage requires a reliable automated control system [5], [11]. While large installations use costly industrial PLCs or SCADA architectures, low-cost microcontrollers offer an accessible solution for small rural communities [11], [12]. Without automatic control, it is difficult to regulate voltage levels, operate water valves, prevent tank overflows, and keep the power supply working smoothly [5]. Therefore, the main goal of this research is to verify the control logic of an easy-to-use, low-cost automatic controller for a small solar-water storage demonstrator system [5], [12]. The main objectives are to design the overall system concept and layout [3], [12], write an automatic control program using Arduino software to manage water pumps, valves, and power switching [12], [13], [14], and test the control circuit and software using Proteus 8 simulation software to ensure reliable operation [6], [13].

LITERATURE REVIEW

Hybrid PV-Pumped Storage Hydropower Architectures

A Standalone Hybrid Renewable Energy System (HRES) combines two or more renewable energy sources to reduce the drawbacks of relying on a single source [1], [2]. In off-grid rural electrification, combining solar photovoltaic (PV) power with pumped storage hydropower (PSH) helps solve the problem of solar power intermittency [1], [6]. While large PSH plants need natural mountains and valleys, small-scale PSH systems can use elevated artificial water tanks [6], [9], [12]. This makes small-scale PSH suitable for flat rural areas [6], [12]. During the day, extra solar power is converted into gravitational potential energy by pumping water into an upper tank, which can be released later to generate electricity when there is no sunlight [1], [6], [10]. Figure 1 shows the conceptual operation of a standalone PV energy generation unit integrated with pumped hydro storage during the day (pumping mode) and night (generating mode) [6].

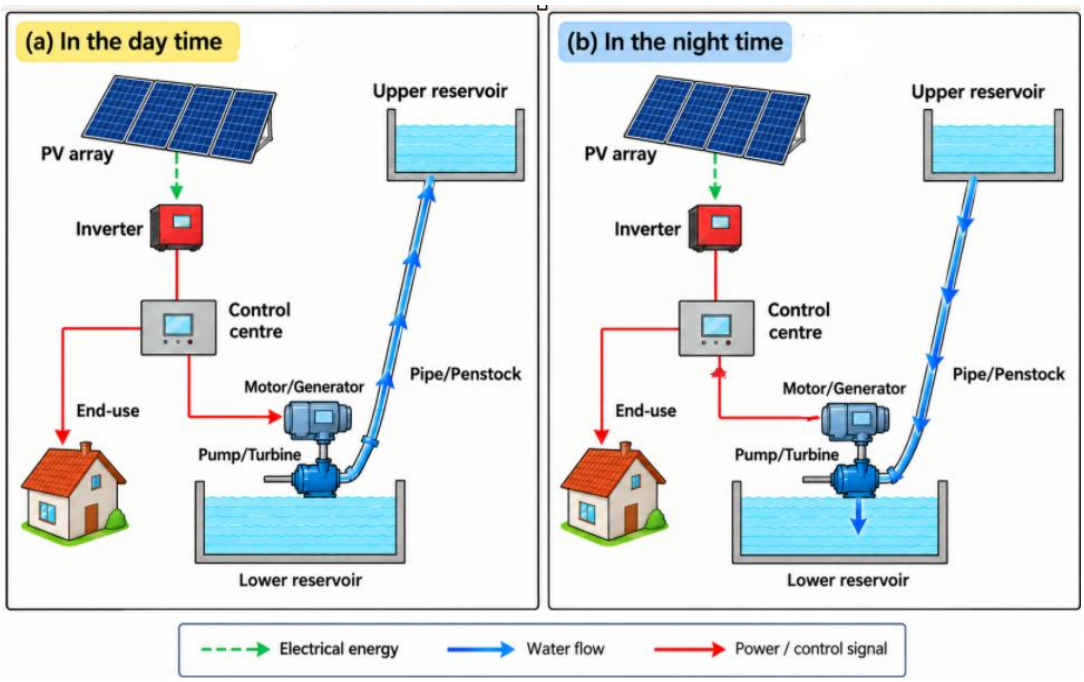

Figure 1. Diagram of PSH with stand-alone PV power generation unit

In off-grid systems, Demand-Side Management (DSM) techniques—such as priority load shedding, peak clipping, and automated source switching—help balance supply and demand to keep essential loads working [15], [16], [17]. While large power grids use expensive Industrial Programmable Logic Controllers (PLCs) or SCADA systems, small rural systems can use low-cost microcontrollers [13], [18]. Modern microcontrollers have enough processing power to execute these EMS control algorithms automatically at a much lower cost [19]. Figure 2 depicts standard DSM load-shaping techniques applied to match electrical generation profiles [16].

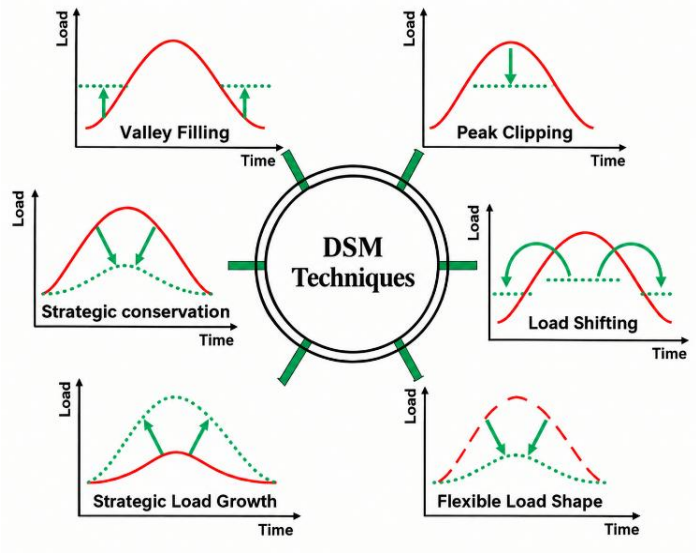

Figure 2. DSM techniques to control load supply

Solar battery charging also requires an effective charge controller to prevent overcharging and reverse current flow at night [20]. Maximum Power Point Tracking (MPPT) controllers act as high-frequency DC-DC converters that automatically adjust voltage and current to get the maximum power from solar panels compared to older Pulse Width Modulation (PWM) controllers [20]. Additionally, low-cost microcontrollers can be paired with Real-Time Clock (RTC) modules and Secure Digital (SD) card readers to record system parameters over time [21], [22]. This data logging capability helps local technicians monitor power usage, detect technical faults, and track system performance in remote areas [13], [21].

METHODOLOGY

System Architecture and Conceptual Layout

The proposed hybrid solar-PSH control framework consists of four primary interconnected components: Solar Generation, Water Battery Energy Storage, Automated Control Core, and Parameter Monitoring/Data Logging. Figure 3 illustrates the complete block diagram of the system.

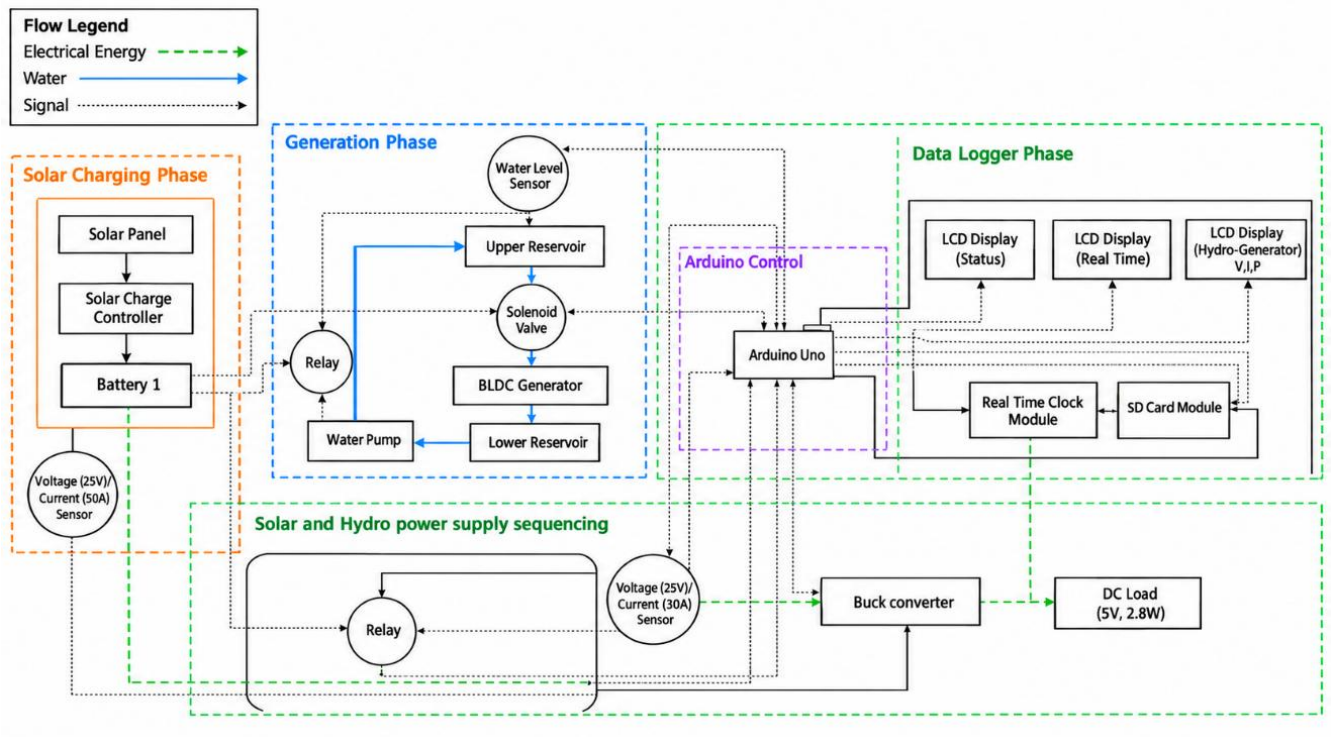

Figure 3. System block diagram showing energy, water, and signal paths

The solar charging circuit uses three 100W monocrystalline solar panels connected in parallel (V_{mp} = 17.7V, I_{mp} = 17.1A) and linked to a 30A MPPT solar charge controller [20]. The charge controller charges a primary 12.8V, 120Ah Lithium Iron Phosphate (LiFePO4) battery bank. This battery bank powers the microcontroller, sensing modules, motorized valves, and a 12V 19W DC submersible water pump [14], [15]. Water pumped up into the 160-liter upper tank (Ø 0.55 m × 0.70 m height) at a 3-meter head represents stored potential energy of approximately 1.31 Wh, functioning as a small-scale demonstrator relative to the 1536 Wh battery bank [6]. When released through a motorized ball valve, water flows down to spin a micro Pelton wheel turbine connected to a Brushless AC generator [14]. The generator output is converted to DC and stepped down using a Buck converter to power a 5V 2.8W DC load.

Finite State Machine (FSM) Control Algorithm

The main control program was written in C++ using the Arduino IDE and operates as a Finite State Machine (FSM) [14]. Figure 4 shows the logical flowchart of the control program. The control algorithm operates across two primary operational states with built-in protection logic:

1. State 1: Filling Mode (PUMP_ON_FILLING): The microcontroller energizes the pump relay to activate the 12V water pump after confirming battery threshold ($V_{bat} \geq 12.4V$) and applying a start-up delay [13]. An HC-SR04 ultrasonic sensor situated above the upper tank continuously monitors water distance. To prevent overflow, when echo duration readings reach the full upper threshold (FULL_RAW ≤ 1500 µs) indicating a full reservoir, the pump relay opens and the FSM transitions to State 2.

2. State 2: Generation Mode (VALVE_ON_GENERATING): The microcontroller actuates a relay channel to open a 12V motorized ball valve, initiating water discharge onto the Pelton hydro turbine. Continuous analog monitoring of generator output voltage (V_{gen}) and current (I_{gen}) commences. For dry-run protection, when V_{gen} falls below the functional threshold ($V_{gen} < 0.5V$), indicating tank depletion, the valve relay closes, generation metrics are saved, and the FSM loops back to State 1.

To eliminate false trigger events resulting from electrical noise or water surface agitation, an exponential low-pass filter is applied to raw analog power calculations:

$$P_{filtered} = \alpha \cdot P_{raw} + (1 - \alpha) \cdot P_{previous}$$

where $\alpha = 0.1$ represents the smoothing factor applied across ADC input channels.

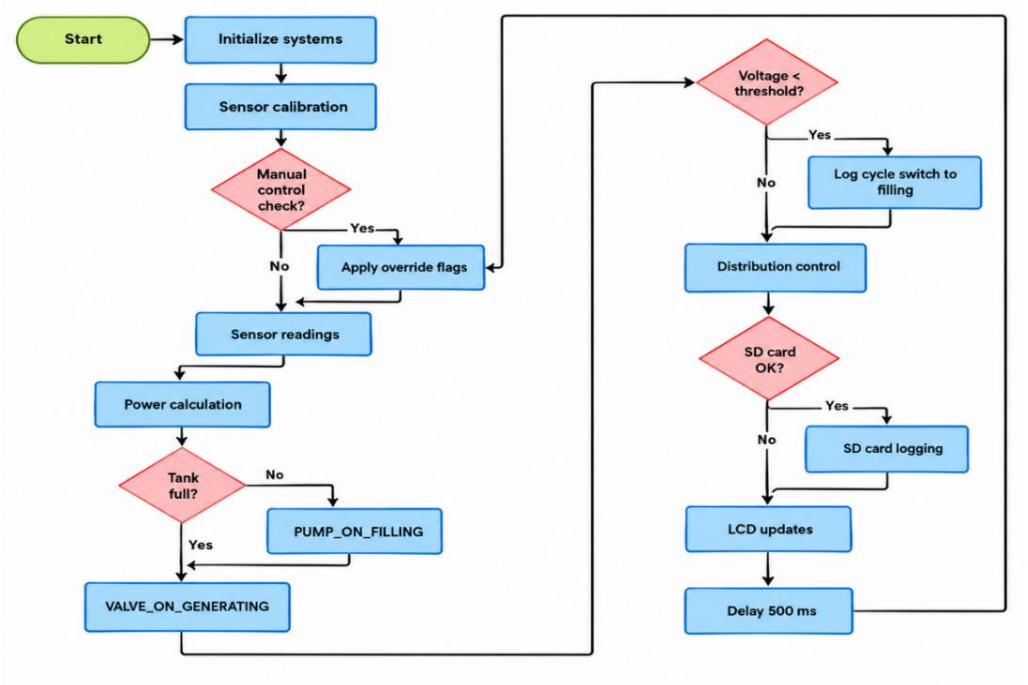

Figure 4. Logical flowchart of the embedded Finite State Machine control algorithm

Electrical Hardware Circuit Design

The complete electronic layout was designed using Fritzing and modeled in Proteus 8 to verify physical wiring logic between the microcontroller, sensor network, relays, and display peripheral modules [14]. Figure 5 illustrates the detailed electronic circuit schematic.

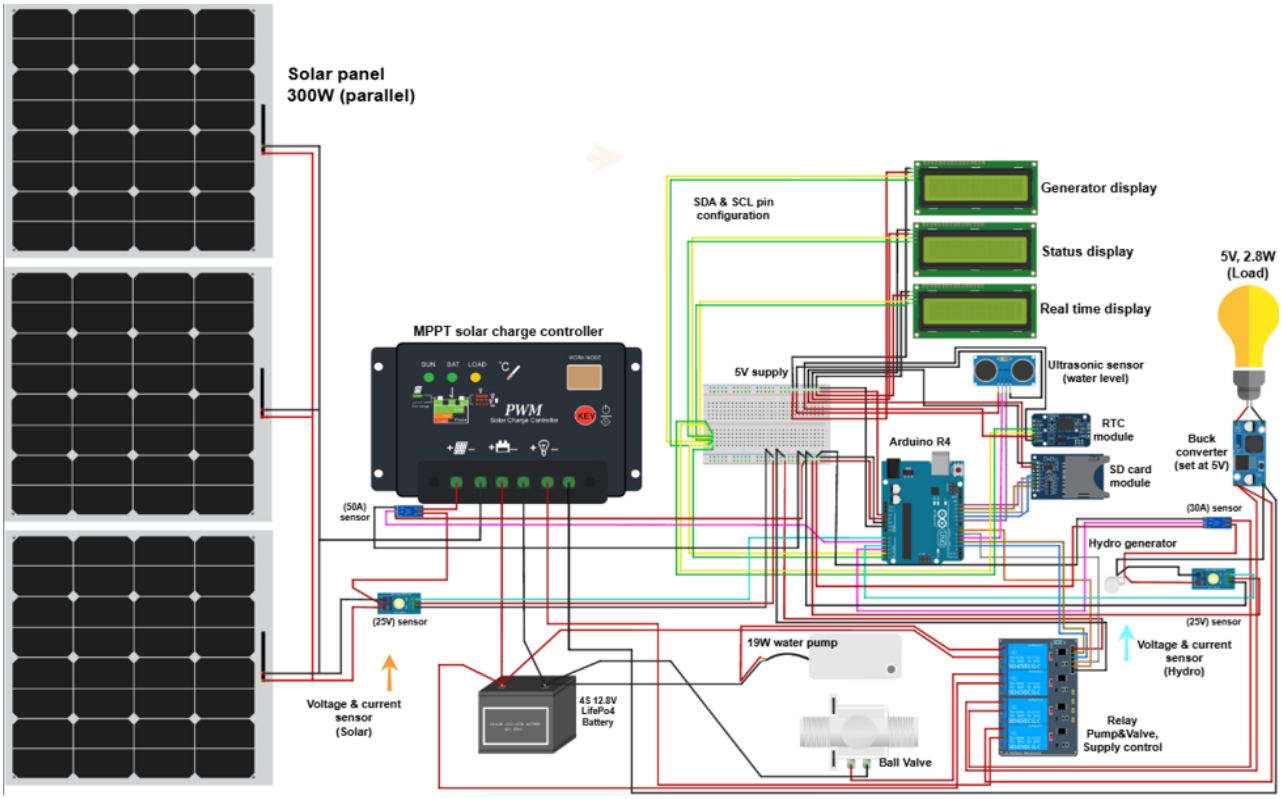

Figure 5. Complete electronic hardware wiring and circuit schematic diagram designed in Fritzing

SIMULATION RESULTS AND DISCUSSION

Proteus 8 Simulation Performance Evaluation

Before physical assembly, the electronic circuit and automation logic were constructed and validated inside the Proteus 8 simulation environment as in Figure 6. The simulation verified the computational stability of the Arduino control framework, sensor calibration logic, and multi-peripheral communication buses under controlled virtual conditions. Virtual potentiometers and variable power sources were used to simulate dynamic solar irradiance shifts and fluctuating hydro-generator voltage outputs

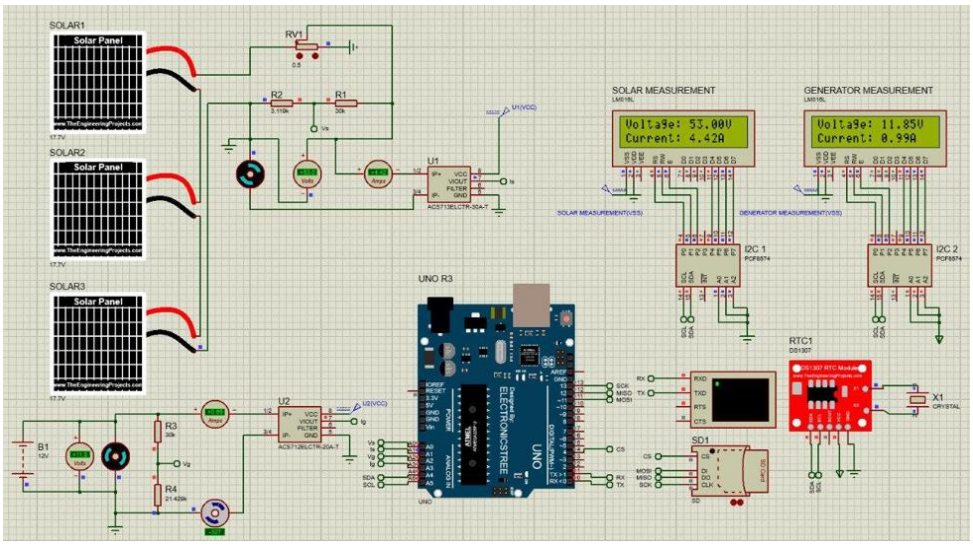

Figure 6. Hardware circuit design and component layout inside the Proteus 8 simulation workspace

During simulation execution, the Virtual Terminal window logged real-time parameter outputs from the simulated solar array, ACS712/ACS724 current sensors, voltage divider networks, and the hydro-generator as in Figure 7. The simulation trace confirmed that the Finite State Machine (FSM) executed state transitions smoothly without software lockups or timing delays.

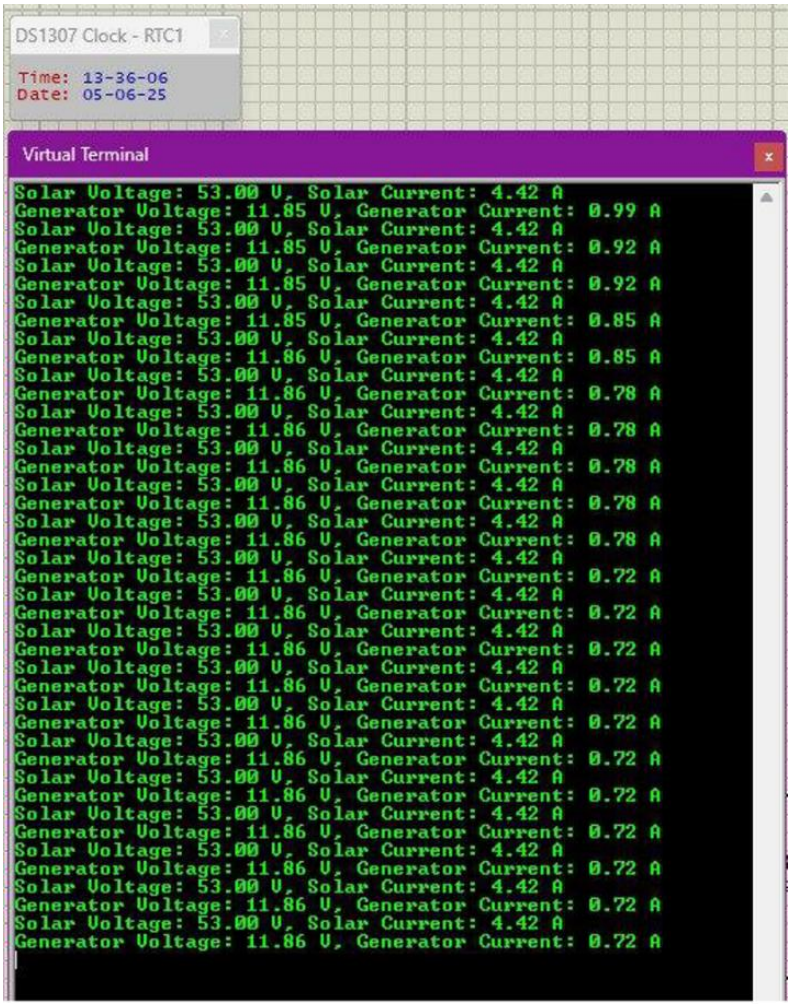

Figure 7. Virtual Terminal telemetry output log displaying simulated solar and hydro generator parameters

Control Logic and State Machine Switching Analysis

The control core executes an embedded Finite State Machine (FSM) designed to manage energy flow across different operational scenarios. The simulation results demonstrate the responsiveness of the switching logic under simulated sensor triggers:

1. Filling State (PUMP_ON_FILLING): The controller continuously samples the simulated ultrasonic water level sensor. When the water distance reading reaches the upper threshold (echo duration ≤ 1500 µs), the pump control signal deactivates, preventing overflow and transitioning the system to generation mode.

2. Generating State (VALVE_ON_GENERATING): The control unit actuates the motorized ball valve signal, initiating simulated hydro discharge. As the virtual upper reservoir empties, generator output decays. When the voltage drops below the 0.5 V cut-off threshold, the valve signal closes, preventing dry runs and looping the controller back to the filling state.

During simulation execution, the exponential low-pass filter algorithm ($P_{filtered} = \alpha \cdot P_{raw} + (1 - \alpha) \cdot P_{previous}$ with $\alpha = 0.1$) successfully smoothed raw ADC fluctuations from simulated current and voltage divider sensors. This prevented false threshold triggers and erratic relay switching during rapid state changes. The software simulation confirmed that mode transitions occur automatically without deadlocks, timing conflicts, or manual intervention. Owing to the small demonstrator scale, the theoretical hydraulic energy stored in the full upper

tank is about 1.31 Wh; the prototype is therefore intended to verify the multi-source switching logic rather than to supply a significant amount of energy [6], [13].

Multi-Display Telemetry and SPI Data Logging Integration

System monitoring and data acquisition logic were evaluated across simulated multi-peripheral communication buses. The software logic successfully managed simultaneous data transmission across both I2C and SPI buses without bus lockups or timing delays.

I2C Multi-LCD Synchronization: Three 20×4 character LCD screens connected on a shared I2C bus successfully rendered system status, real-time electrical metrics (V, I, P), and RTC timestamps concurrently.

SPI Secure Digital (SD) Card Logging: The data logging algorithm verified continuous text logging into two distinct CSV files: high-frequency real-time parameter logs (datalog.txt) and per-cycle summary statistics (cycles.txt). Real-time timestamps provided by the DS1307/DS3231 RTC module ensured precise historical traceability.

This virtual telemetry validation confirms that embedded microcontrollers can provide comprehensive monitoring and offline auditing features necessary for remote off-grid installations.

CONCLUSION

This study successfully designed and verified the control logic of an automated control unit for a micro-scale standalone hybrid Solar PV and Pumped Storage Hydropower (PSH) off-grid system using Arduino software and Proteus 8 simulation. By utilizing a Finite State Machine (FSM) control algorithm, the system demonstrated reliable, automated state transitions between solar charging, water pumping, hydro power generation, and load dispatching without requiring human intervention. Signal filtering effectively smoothed analog sensor noise, while the RTC and SD card modules ensured timestamped data logging for offline performance tracking. Overall, the simulation confirms that low-cost embedded automation can manage micro-scale renewable energy storage efficiently, providing a sustainable alternative to chemical batteries in isolated off-grid rural communities. Future work will focus on integrating IoT modules such as ESP32 for remote cloud monitoring and predictive scheduling.

ACKNOWLEDGEMENT

The researchers express their appreciation to Universiti Teknikal Malaysia Melaka (UTeM) for hosting the research and providing technical assistance.

REFERENCES

1. IEA, IRENA, UNSD, World Bank, and WHO, Tracking SDG 7: The Energy Progress Report 2023, Washington, DC: World Bank, 2023.
2. A. Aziz and K. N. Shamsudin, "TNB experience in developing solar hybrid station at RPS Kemar, Gerik, Perak Darul Ridzuan," IOP Conference Series: Earth and Environmental Science, vol. 16, p. 012145, Jun. 2013.
3. F. A. Alturki and E. M. Awwad, "Sizing and cost minimization of standalone hybrid WT/PV/Biomass/Pump-Hydro storage-based energy systems," Energies, vol. 14, no. 2, p. 489, Jan. 2021.
4. M. Hossain, S. Mekhilef, and L. Olatomiwa, "Performance evaluation of a stand-alone PV-wind-diesel-battery hybrid system feasible for a large resort center in South China Sea, Malaysia," Sustainable Cities and Society, vol. 28, pp. 358–366, Oct. 2016.
5. M. S. Javed, T. Ma, J. Jurasz, and M. Y. Amin, "Solar and wind power generation systems with pumped hydro storage: Review and future perspectives," Renewable Energy, vol. 148, pp. 176–192, Apr. 2020.

6. T. Ma, H. Yang, L. Lu, and J. Peng, "Pumped storage-based standalone photovoltaic power generation system: Modeling and techno-economic optimization," Applied Energy, vol. 137, pp. 649–659, Jan. 2015.
7. C. H. B. Apribowo et al., "Optimal planning of battery energy storage systems by considering battery degradation due to ambient temperature: A review, challenges, and new perspective," Batteries, vol. 8, no. 12, p. 290, Dec. 2022.
8. N. Narayan, T. Papakosta, V. Vega-Garita, Z. Qin, J. Popovic-Gerber, P. Bauer, and M. Zeman, "Estimating battery lifetimes in Solar Home System design using a practical modelling methodology," Applied Energy, vol. 228, pp. 1629–1639, Oct. 2018.
9. N. Guignard, C. Cristofari, V. Debusschere, L. Garbuio, and T. L. Mao, "Micro pumped hydro energy storage: Sketching a sustainable hybrid solution for Colombian off-grid communities," Sustainability, vol. 14, no. 24, p. 16734, Dec. 2022.
10. M. Petrollese, P. Seche, and D. Cocco, "Analysis and optimization of solar-pumped hydro storage systems integrated in water supply networks," Energy, vol. 189, p. 116176, Sep. 2019.
11. M. Mahajan, S. Patharwat, A. Ingale, R. Chaudhari, and I. Patil, "Demand side management by using GSM interfacing with Arduino (UNO)," International Journal for Research in Engineering Application & Management, vol. 3, no. 1, Apr. 2017.
12. B. S. Pali and S. Vadhera, "Uninterrupted sustainable power generation at constant voltage using solar photovoltaic with pumped storage," Sustainable Energy Technologies and Assessments, vol. 42, p. 100890, Nov. 2020.
13. A. A. Malla and S. Mirza, "Matlab and Arduino based hydro electric dam control with overflow gate and water level control with turbine status," Journal of Emerging Technologies and Innovative Research, vol. 6, no. 6, pp. 230–238, 2019.
14. N. M. Mohd Noor, M. F. Mohd Zulkeflee, and Y. Yusof, "Developing the solar water pump using Arduino microcontroller for agriculture purposes," Journal of Agricultural Technology, vol. 16, no. 4, pp. 881–892, Dec. 2020.
15. A. Bhayo, H. H. Al-Kayiem, S. I. U. Gilani, and F. B. Ismail, "Power management optimization of hybrid solar photovoltaic-battery integrated with pumped-hydro-storage system for standalone electricity generation," Energy Conversion and Management, vol. 215, p. 112942, May 2020.
16. J. A. Sa'ed, Z. Wari, F. Abughazaleh, J. Dawud, S. Favuzza, and G. Zizzo, "Effect of demand side management on the operation of PV-integrated distribution systems," Applied Sciences, vol. 10, no. 21, p. 7551, Oct. 2020.
17. M. H. Alham, M. Elshahed, D. K. Ibrahim, and E. E. A. El-Zahab, "Optimal sizing and power management of standalone hybrid renewable energy systems utilizing demand-side management," Energy Reports, vol. 8, pp. 10984–10998, Nov. 2022.
18. S. Syafii, F. Azizah, and I. Salfikri, "Solar pumps automation system using programmable logic controller for pumped hydro storage," International Journal of Power Electronics and Drive Systems, vol. 15, no. 3, pp. 1517–1525, Jul. 2024.
19. A. Supardi and M. M. Abdulah, "Development of an Arduino-based monitoring system for pico-hydro power plants," E3S Web of Conferences, vol. 500, p. 03015, Jan. 2024.
20. M. LokeshReddy, P. J. R. P. Kumar, S. A. M. Chandra, T. S. Babu, and N. Rajasekar, "Comparative study on charge controller techniques for solar PV system," Energy Procedia, vol. 117, pp. 1070–1077, Jun. 2017.
21. I. Oladimeji, Y. B. Adediji, J. B. Akintola, M. A. Afolayan, O. Ogunbiyi, S. M. Ibrahim, and S. Z. Olayinka, "Design and construction of an Arduino-based solar power parameter-measuring system with data logger," Arid Zone Journal of Engineering, Technology and Environment, vol. 16, no. 3, pp. 511–520, 2020.
22. M. Fuentes, M. Vivar, J. M. Burgos, J. Aguilera, and J. A. Vacas, "Design of an accurate, low-cost autonomous data logger for PV system monitoring using Arduino™ that complies with IEC standards," Solar Energy Materials and Solar Cells, vol. 130, pp. 529–543, Nov. 2014.