Development and Performance Analysis of Vertical Axis Wind Turbine Prototype for Low Wind Speed in Malaysia

Nur Fathiah Mohd Nor[1,2*], Nor Mazlin Zahari[1,2], Chee Kah Wai[1], Amirul Zikry Rosli[1], Afham Shaza Syahmee Shameeley[1], Muhammad Atif Ajwad Jafri[1] and Eliz Qhalysa Rusazali[1]

[1]Faculty of Mechanical Technology and Engineering, Universiti Teknikal Malaysia Melaka, Hang Tuah Jaya, 76100 Durian Tunggal, Melaka, Malaysia

[2]Centre of Advanced Research on Energy, Universiti Teknikal Malaysia Melaka, Hang Tuah Jaya, 76100 Durian Tunggal, Melaka, Malaysia

***Corresponding Author**

DOI: https://doi.org/10.47772/IJRISS.2026.101000388

Received: 18 October 2026; Accepted: 23 October 2026; Published: 03 November 2026

ABSTRACT

This study presents the development and performance analysis of a small-scale Savonius vertical axis wind turbine prototype designed for the low wind speed conditions characteristic of Malaysia, where average wind speeds range between 2 and 5 m/s. An integrated product development process includes morphological concept generation, iterative screening, Pugh analysis, a weighted decision matrix, RULA ergonomics assessment, Design for Manufacture and Assembly, Failure Mode and Effects Analysis, Finite Element Analysis and Computational Fluid Dynamics yielded a five-blade PVC Savonius rotor of 0.6 m diameter and 0.6 m height, giving a swept area of 0.36 m², mounted on a stainless-steel shaft within a plywood and pinewood structure. Two conditions were examined: 5 m/s and a maximum design wind speed of 14 m/s. Theoretical analysis predicted rotational speeds of 96–160 rpm with torque between 0.25 and 0.69 Nm at 5 m/s, rising to 267–445 rpm and 1.95–5.40 Nm at 14 m/s. CFD returned torques of approximately 0.5 Nm and 3.78 Nm respectively, consistent with the analytical predictions at the prescribed operating points. The fabricated prototype produced 12.3 V and 0.06 A at approximately 200 rpm at 5 m/s, and 12.57 V and 0.15 A at approximately 385 rpm at 14 m/s, with a measured mechanical shaft power of 24.53 W. DFMA redesign reduced prototype weight from 45.7 kg to 11.05 kg, assembly time from 5 hours to 1.25 hours, a reduced in operation cost of RM77.10, raising design efficiency from 6% to 14%. The results confirm the technical feasibility of a low-cost, lightweight Savonius VAWT for small-scale and off-grid renewable energy generation in low wind speed environments while identifying the generator and transmission as the principal constraint on electrical output.

Keywords: Savonius rotor; low wind speed; DFMA; CFD; renewable energy; power output

INTRODUCTION

Rising global energy consumption, driven by concerns over global warming, environmental degradation, and the depletion of non-renewable resources, has intensified the search for sustainable alternatives. In Malaysia, wind turbine performance is constrained by low wind speed levels and a humid tropical environment, which together render traditional turbine technologies less effective in this setting; horizontal axis turbines in particular are generally less efficient in low-wind-speed environments.

Savonius vertical axis wind turbines are well suited to such conditions. Unlike horizontal axis turbines, Savonius rotors are omnidirectional and possess good self-starting ability, making them suitable for low wind speed sites. They generate high starting torque without back-up power, require no complex detection and control system, and are structurally robust enough to resist the turbulent winds encountered in built environments (Aboujaoude et al., 2021), while their simple design is economically competitive and requires limited installation space.

Wind energy development in Malaysia has nevertheless faced persistent barriers. In 2007, a solar–wind hybrid system was installed on Pulau Perhentian by the National Energy Policies and Universiti Kebangsaan Malaysia, but it was never connected to the electrical network because of weaknesses in its hybrid power management strategy during periods of lower wind and solar irradiation (Samrat et al., 2015). Perhentian is a hot and humid island with rainfall throughout the year, which constrains the performance of renewable systems there (Samrat et al., 2015). Subsequent techno-economic assessments have continued to favour hybrid solar–wind–storage configurations rather than wind alone and in hybrid configurations evaluated for the island, wind accounted for only 2.4% of annual generated power (Noman et al., 2020). One major issue in the earlier installation was the use of steel as the main structural material, which left turbine components highly vulnerable to corrosion under Malaysia's tropical climate of high humidity, frequent rainfall, and intense heat, accelerating material degradation and significantly increasing maintenance costs. Compounding this, low and inconsistent wind speeds are insufficient to rotate relatively heavy turbine components; mean wind speeds in Melaka are only around 3.68 m/s to 4.48 m/s, whereas wind turbines typically operate efficiently only between 6 m/s and 25 m/s. Malaysia lies within a low-wind-speed region in which the coastal zones of Peninsular Malaysia, Sabah and Sarawak receive maximum wind speeds below 7 m/s and annual wind power below 400 W/m² (Uti et al., 2017). The failed installation used a horizontal axis wind turbine designed for high wind speed areas and consequently produced minimal energy output.

This study therefore addresses the need for a turbine design optimised for low wind speed conditions and capable of generating usable electrical power under Malaysia's climatic conditions. Three objectives guided the study: (i) to design a Savonius-type VAWT able to operate effectively and safely between 5 m/s and 14 m/s; (ii) to develop a lightweight, durable, and cost-effective prototype from readily available materials such as PVC and plywood; and (iii) to evaluate its performance in terms of generated current, voltage, and rotational speed. In addressing these objectives, the study contributes to Sustainable Development Goals 7, 9, and 12, consistent with the wider small wind turbine literature, where sustainable design for low-cost, easy, and safe access to clean energy is linked directly to SDG 7.1.

RELATED WORK

Low wind speed conditions and small wind technology

Malaysia's wind resource is low and unevenly distributed. The country lies in a low-wind-speed region where the coastal zones of Peninsular Malaysia, Sabah and Sarawak receive maximum wind speeds below 7 m/s and annual wind power below 400 W/m². Annual mean wind speeds of 5.364 m/s have been recorded for Terengganu, 5.15 m/s for Sarawak and 5.165 m/s for Sabah while maximum speeds of 5.5 m/s have been measured at Tioman and Tenggol and 4.5 m/s at Layang-layang Island. Offshore speeds are similarly modest: 2.5 to 3.2 m/s off Penang, below 3 m/s around Penang Island, and 3.5 to 3.8 m/s along the coasts of Perak, Selangor and Negeri Sembilan (Li et al., 2023), with annual mean offshore speeds across the Malaysian coast not exceeding 6 m/s. Two East Malaysian sites, Santubong and Kudat, fall outside the Pacific Northwest National Laboratory thresholds on mean wind speed but remain categorisable for smaller-scale wind power generation at hub heights above 10 m, whereas Sarawak and Labuan are considered unsuitable because of their weak resources. In practice, large-scale inland wind farms are financially unfeasible, but appropriately sized installations could still generate power, most favourably in coastal or hilly regions such as Kudat in Sabah.

Savonius rotor performance

The conventional Savonius rotor typically achieves power coefficients between 0.1 and 0.25 and suffers from low efficiency and high negative torque, with experimental measurements placing the maximum power coefficient in the literature between 0.10 and 0.25 (Ricci et al., 2015). Geometric optimisation can raise this: a full factorial optimisation of twist angle and aspect ratio achieved an experimental power coefficient of 0.2326 at a twist angle of 30° and an aspect ratio of 2.0.

Because cut-in behaviour determines whether a Savonius rotor is usable at all in low wind speeds, its starting characteristics have drawn particular attention. Wind tunnel measurements show that the self-starting wind speed of a conventional rotor fluctuates with azimuth angle, and that the lowest average self-starting wind speed, 2.5

m/s, is achieved at a twist angle of 90°, while the highest power coefficient, 0.201, occurs at 45°; despite a lower power coefficient than a conventional rotor (0.184 against 0.190), the 90° twisted rotor produced 1.6 to 5.1 times the average power output (Farozan et al., 2025). Twist angle also improves starting capability by producing a positive coefficient of static torque across the rotor angle range (Zakaria & Ibrahim, 2020), and experimental work on helical Savonius rotors reported a cut-in speed of 1.51 m/s with three blades at a twist angle of 180° over a wind speed range of 0 to 5 m/s (Prabowo et al., 2023). End plates, blade overlap and rotor twist have likewise been shown experimentally to affect performance. Validated 3D CFD modelling approaches are well established for Savonius rotors and provide a basis for predicting performance before fabrication (Ferrari et al., 2017).

Manufacturability and cost

Manufacturability is critical for turbines intended for rural or off-grid use. Work on kilowatt-scale VAWTs for remote applications has shown that redesigning for manufacture reduced construction time to 25% of the original and reduced weight by 25% while maintaining functionality and high-wind survivability (French et al., 2013). More broadly, future small wind turbine designs are expected to incorporate design for manufacturing, installation, and recycling from the concept phase while lowering the levelised cost of energy (Bianchini et al., 2022), and additive manufacturing with modular design has been explored as a route to low-cost turbines supporting rural electrification (Olivera et al., 2024).

METHODOLOGY

Product Development Process

The project followed a multi-stage product development process combining concept generation, concept screening, Pugh analysis, weighted decision matrix selection, DFMA evaluation, FMEA assessment, CFD simulation, and structural analysis. The sequence began with concept generation, followed by iterative screening of the resulting design alternatives. The concepts that survived screening were then compared through Pugh analysis and, subsequently, a weighted decision matrix that determined the final selection. The chosen concept was refined through an ergonomics assessment and a Design for Manufacture and Assembly evaluation, after which a Failure Mode and Effects Analysis was applied to identify potential failure modes and mitigate their effects. Theoretical performance analysis was then carried out alongside finite element analysis and vibration analysis to verify structural integrity, and the aerodynamic behaviour of the rotor was examined through computational fluid dynamics simulation. The process concluded with fabrication of the prototype and experimental testing of its performance. Ten conceptual designs were generated through a morphological chart. Iterative filtering eliminated Concepts 1, 2, 6, and 10 due to low efficiency at low wind speeds, difficult fabrication, higher cost, and increased mechanical complexity, while Concepts 3, 4, 5, 7, 8, and 9 proceeded on the basis of better aerodynamic performance, structural stability, and suitability for low wind conditions. Pugh analysis identified Concepts 4 and 8 as the strongest candidates with equal total scores of +4, requiring a weighted decision matrix to differentiate them. With criteria derived from an objective tree the cost and practicality weighted at 40% and performance at 60%. Concept 8 outperformed Concept 4 with total weighted ratings of 3.56 against 3.02, and was selected as the final design.

Ergonomics, DFMA, and FMEA

Three critical maintenance and assembly tasks were simulated using the Rapid Upper Limb Assessment method: electric box maintenance scored 4 (moderate risk arising from arm lifting and wrist bending), blade and bolt/nut maintenance scored 3 (acceptable low risk), and PVC cutting scored 4 (moderate risk from repetitive wrist and arm motions). These findings informed the subsequent DFMA modifications, which included reducing the number of fasteners and simplifying access to the electric box.

A Boothroyd and Dewhurst DFMA analysis was conducted to compare the original embodiment with the redesigned configuration, while FMEA formed a distinct stage of design refinement within the development process. The original embodiment of Concept 8 featured 20 Savonius blades and was heavy (45.7 kg) and costly, using rubberwood for the structure and PVC for the blades. Too many blades also impeded airflow, limiting

torque to 3.70 Nm at 14 m/s and 0.47 Nm at 5 m/s, and assembly of 782 total parts including 240 fasteners and 40 L-brackets that took around five hours of assembly.

Engineering Analysis and CFD Analysis

Two operating conditions were assessed: a low operational wind speed of 5 m/s, typical of Malaysia's normal conditions, and a maximum design wind speed of 14 m/s representing an extreme situation. Loads and load transfer were analysed so that all parts of the turbine would be able to withstand the forces arising from wind and rotation. CFD analysis was conducted on the final Savonius configuration, consisting of five PVC half-cylinder blades positioned between top and bottom support plates, with a rotor diameter of 0.6 m, a height of 0.6 m, and a swept area of 0.36 m^2. Airflow was assumed incompressible with a constant air density of 1.225 kg/m^3; blades were treated as rigid bodies and minor geometric features such as fasteners and fillets were excluded to simplify the computational domain. CFD was selected as the numerical method for investigating airflow over the blades, evaluating velocity and pressure distributions, turbulence effects, and overall aerodynamics, and thereby providing information on the turbine's energy-harnessing efficiency before construction. The rotor rotational speed was specified from the theoretical tip speed ratio range, and the main output parameters were velocity contours, streamline patterns, and aerodynamic torque on the rotor shaft, with torque used to determine mechanical power output and the corresponding power coefficient. The simulation was run at the two prescribed operating points without a mesh-independence study, so the numerical uncertainty of the solution is not quantified, and the mesh resolution, turbulence model and solver settings are not reported here. The CFD results are accordingly presented as a consistency check on the analytical model rather than as validation of it.

Test Methods

Testing was carried out indoors with a centrifugal blower as the wind source so that conditions could be held constant. For the final evaluation the blower was placed one metre from the rotor, and the blower–turbine distance was adjusted to reach the target speeds of 5 m/s and 14 m/s. An air velocity meter mounted directly in front of the blades confirmed the velocity reaching the rotor, and that value was taken as the reference wind speed. The turbine was run for several minutes until conditions stabilised before each reading was taken.

Rotational speed was measured with an optical tachometer reading reflective tape on the shaft, and electrical output with multimeters connected to the generator circuit, in parallel for voltage and in series for current. Torque was obtained indirectly, with a load cell measuring the force exerted at a known radius, from which torque and shaft power were calculated. The generator was a NEMA 23 stepper motor driven as a generator, with a back-EMF constant of approximately 0.547 V/(rad/s), feeding three KBPC3510 rectifiers and a DC–DC step-up voltage booster. Power was transmitted from the rotor shaft through a 20-tooth and a 60-tooth 2GT pulley linked by a 280 mm belt, giving a 1:3 step-up so that the generator turns three times per rotor rotation. A charge controller and a 12 V sealed lead-acid battery completed the electrical system, with battery voltage measured before and after each charging period. Each run recorded wind speed, rotational speed, output voltage, output current, and battery voltage before and after charging. The load was therefore the 12 V sealed lead-acid battery together with the charge controller; a light bulb connected to the controller and a mobile phone charged through the controller's USB output demonstrated usable output, but no controlled resistive load was available, so the electrical output was not characterised across a defined load.

RESULTS AND DISCUSSION

DFMA and Design Efficiency

The DFMA redesign substantially improved manufacturability and reduced cost as seen in Figure 1. The redesign reduced the blade count to five and switched to a plywood structure with PVC blades; total parts dropped to 218, fasteners to 60, and L-brackets to 10 as seen in Table 1. The reduced blade counts also improved aerodynamic performance slightly, to 0.5 Nm at 5 m/s and 3.78 Nm at 14 m/s.

Table 1. Comparison of the initial and new design after DFMA

Parameter	Initial Design	New Design	Improvement
Number of different parts	7	7	-
Total number of parts	782	218	-
Total operation time	341.37 s	148.59 s	56.6%
Total operation cost	RM136.54	RM59.44	56.6%
Design efficiency	6%	14%	57.1%
Weight	45.7 kg	11.05 kg	75.8%

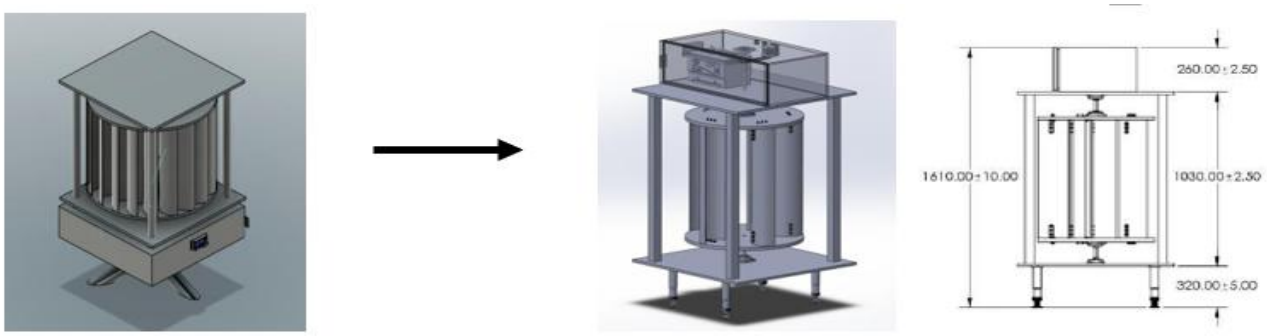

Figure 1. Turbine design before (left) and after (right) DFMA redesign

Theoretical Performance Analysis

Theoretical aerodynamic performance was estimated using the selected rotor specifications of 0.6 m diameter and 0.6 m height, from which the swept area was calculated; a representative range of Savonius rotor power coefficients was then used to estimate mechanical power, rotor speed, TSR, and aerodynamic torque. The relations used were:

Swept Area: $A = D \times H$

Wind Power: $P_{wind} = \frac{1}{2}\rho A v^3$

Mechanical Power = $P_{mech} = C_p \times P_{wind}$

Tip Speed Ratio: $\lambda = \omega R / v$

Aerodynamic Torque: $\tau = F \times r$

where R = 0.3 m, D = 0.6 m, H = 0.6 m, ρ = 1.225 kg/m³ and A = 0.36 m². For the estimated electrical output, the power coefficient was applied directly to the available wind power; this estimate is an upper bound, as it assumes lossless conversion between the rotor and the electrical terminals and excludes generator, rectifier, booster and transmission losses.

The torque estimation indicated that the Savonius design is highly capable of producing significant torque even under low wind speed conditions. At 5 m/s, the theoretical analysis predicted a rotational speed ranging between 96 and 160 rpm and torque between 0.25 and 0.69 Nm; at 14 m/s, it predicted 267 to 445 rpm with torque between 1.95 and 5.40 Nm as shown in Table 2.

Table 2. Theoretical and CFD performance at 5 m/s and 14 m/s

Parameter	Case 1 (5 m/s)	Case 2 (14 m/s)
Rotor speed (input to CFD)	96 rpm	267 rpm

Theoretical rotor speed range	96 – 160 rpm	267 – 445 rpm
Tip speed ratio at prescribed speed	0.6	0.6
Theoretical torque range	0.25 – 0.69 Nm	1.95 – 5.40 Nm
CFD Torque	~0.5 Nm	~3.78 Nm
Angular velocity	10.05 rad/s	27.96 rad/s
Available wind power	27.56 W	605.05 W
Analytical mechanical power, *Cp*	4.13 – 6.89 W	90.76 – 151.26 W
CFD mechanical power, *Cp*	5.23 W	102.87 W
Power coefficient	0.19	0.17
Estimated DC output voltage	~19.2 V	~35.4 V

As wind speed increased, angular velocity rose from 10.05 rad/s to 27.96 rad/s, mechanical power from 5.23 W to 105.7 W, and available wind power from 27.56 W to 605.1 W, while the power coefficient remained fairly stable, moving only from 0.19 to 0.17 and implying efficient aerodynamics regardless of wind speed change. Electrical power increased from 5.24 W to 102.87 W, motor speed from 192 rpm to 334 rpm, and DC output voltage from 19.2 V to 35.4 V. The analysis therefore confirmed a positive correlation between wind speed and rotational speed, resulting in greater mechanical and electrical power production while the power coefficient was maintained at a relatively constant value; the turbine was also found to generate sufficient voltage even at low wind speeds.

The stable power coefficient observed here sits within the 0.1–0.25 range reported for conventional Savonius rotors, and the values of 0.19 and 0.17 are close to the 0.184 and 0.190 reported for a 90° twisted rotor and a conventional rotor in the same study, though below the 0.2326 achieved at a 30° twist with an aspect ratio of 2.0 and the 0.201 reported at a 45° twist. Since the 90° twisted rotor produced 1.6 to 5.1 times the average power output of the conventional rotor at low wind speeds, twist appears a more productive route to improving the present design than further blade-count reduction. The present prototype was not tested below 5 m/s, so its cut-in speed is unknown; published cut-in values for comparable rotors are 1.51 m/s for a three-blade helical rotor at a 180° twist and 2.5 m/s as the lowest average self-starting speed at a 90° twist, against start-up speeds of 1.5 to 2.5 m/s for the commercial units in the benchmarking exercise. Given that Malaysian mean wind speeds lie between 2 and 5 m/s, establishing the cut-in speed of the present design is the most important remaining measurement for assessing its field viability.

CFD Simulation Analysis

Case 1 was simulated at a wind velocity of 5 m/s with a rotor speed of 96 rpm, and Case 2 at 14 m/s with 267 rpm. In Case 1, the flow visualisation showed smooth airflow around the turbine with minimal turbulence, indicating stable aerodynamic behaviour; the simulated torque of approximately 0.5 Nm aligned well with the theoretical prediction, validating the analytical model and confirming reliable performance under low wind conditions. In Case 2, stronger airflow interaction with the blades produced increased pressure and velocity gradients, yielding a higher torque of about 3.78 Nm. The same form of agreement between CFD and analytical results is consistent with the 3D CFD modelling approaches reported for Savonius turbines, although no quantitative comparison against the experimental data is offered here.

Structural and Load Analysis

This section verifies the turbine at the 14 m/s maximum design wind speed through four checks, finite element analysis of the support structure, overturning stability, shaft stress and blade bending followed by a dynamic assessment and a blade durability assessment. Tipping uses the full installed mass of 19.5 kg, taken as the rotor assembly of approximately 10 kg plus the electrical box of approximately 9.5 kg. The finite element model rounds this to 20 kg as a downward load. The shaft carries the rotor mass alone, 10 kg, since the electrical box is supported by the structure rather than by the shaft.

At 14 m/s, under a lateral wind load of 52 N on the rotor and a downward load of 200 N representing the rounded 20 kg, the support structure returned a maximum total deformation of 2.1632 mm and a maximum von Mises stress of 4.7331 MPa, with a minimum safety factor of 7.4 at the tower joints. Deformation is small relative to the 0.6 m rotor height and stress well below the yield strength of the structural material, so the structure remains

elastic under the design load. For overturning, with the installed mass of 19.5 kg (191.30 N), the wind force acting at 0.744 m and a half-base width of 0.400 m, the overturning moment is 38.6 N·m and the restoring moment 76.52 N·m approximately 1.98 times the overturning moment, so the turbine is stable at the maximum design wind speed.

The 15 mm diameter stainless steel 304 shaft carries the 10 kg rotor mass and a drag force of 51.86 N, producing a bending moment of 1.94 Nm under an axial load of 98.1 N. The combined stress is 47.39 MPa against a yield strength of 205 MPa, a safety factor of 4.32. At 14 m/s the PVC blade bending stress is approximately 5.4 MPa against an allowable 12 MPa, a safety factor of 2.22 analytically and 2.67 in the ANSYS model; the difference reflects the conservative rectangular approximation in the hand calculation. The maximum wind speeds the blade can withstand before the allowable stress is reached is estimated at 20.9 m/s.

The original dynamic check compared only rotational frequency against the natural frequencies of the three principal components and concluded that resonance was not a concern, but it omitted blade passing five times rotational for a five-bladed rotor and used only the design speeds. Rotational excitation spans 1.60 to 4.45 Hz. At 96 rpm rotational frequency is 1.60 Hz and blade passing 8.00 Hz, within 1.2% of the 8.1 Hz PVC tower; at the measured 200 rpm, 3.33 Hz and 16.67 Hz, within 2.4% of the 17.08 Hz pinewood columns; at 267 rpm, 4.45 Hz and 22.25 Hz, 30.3% from the column frequency; and at the measured 385 rpm, 6.42 Hz and 32.08 Hz, 87.8% separated. The shaft frequency of approximately 89.6 Hz remains well above all of these. Separations of one to two percent fall within the conventional resonance risk zone, and both near-coincidences occur at speeds the prototype was actually run at, so the earlier claim that resonance is not a concern is not supported: the static margins remain valid, but a dynamic assessment at these two conditions is required. The column and tower frequencies are also reported inconsistently, with worked calculations giving 17.08 Hz and 8.1 Hz against narrative values of approximately 11.2 Hz and 4.7 Hz, so the modal analysis should be re-run to establish a single set.

PVC was selected for the blades as lightweight, corrosion and moisture resistant, long-lived and reusable, but the material selection identified UV exposure and inadequate material thickness as the root cause of blade damage in the FMEA, where the failure mode carries a risk priority number of 144 in the original design and 120 after redesign. Prolonged UV exposure embrittles PVC as the polymer chains degrade, and the high humidity, year-round rainfall and elevated blade surface temperatures of the Malaysian climate would accelerate surface degradation and reduce impact resistance over the service life. The combination of UV exposure and sustained humidity is more damaging than either factor alone, because absorbed moisture plasticises and swells the surface layer while UV simultaneously attacks the polymer backbone, so the loss of impact resistance under the intended service conditions is expected to be faster than standard UV-only ageing data would suggest. No weathering test was performed, so durability under UV and humidity remains unverified and is identified as a limitation; accelerated UV chamber testing or an outdoor exposure trial is recommended, with moisture and fungal degradation rather than UV governing for the plywood and pinewood components.

Figure 2. FEA results at 14 m/s: (a) total deformation, (b) von-Mises stress, (c) factor of safety

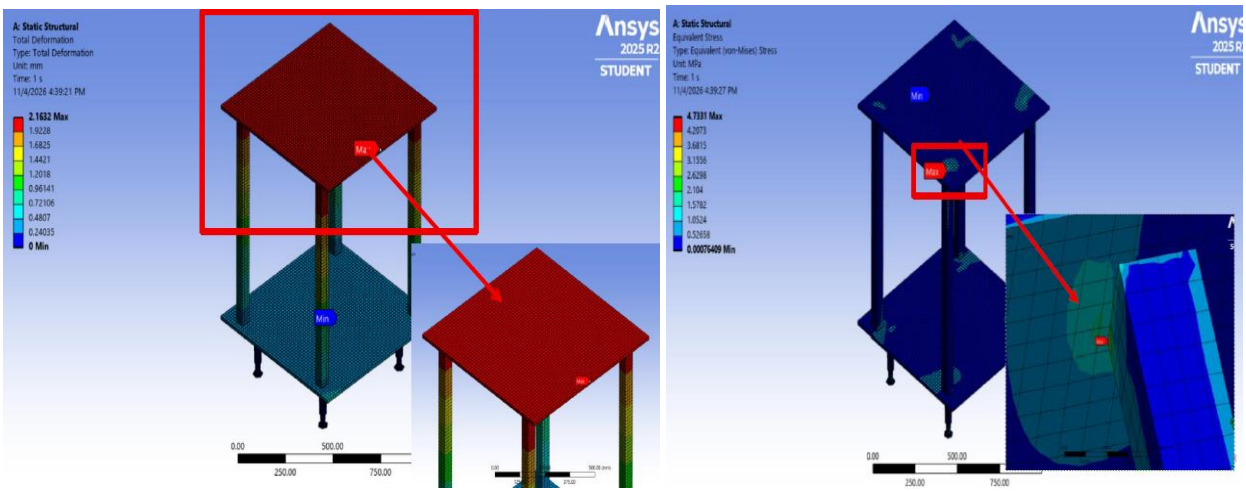

(a) (b)

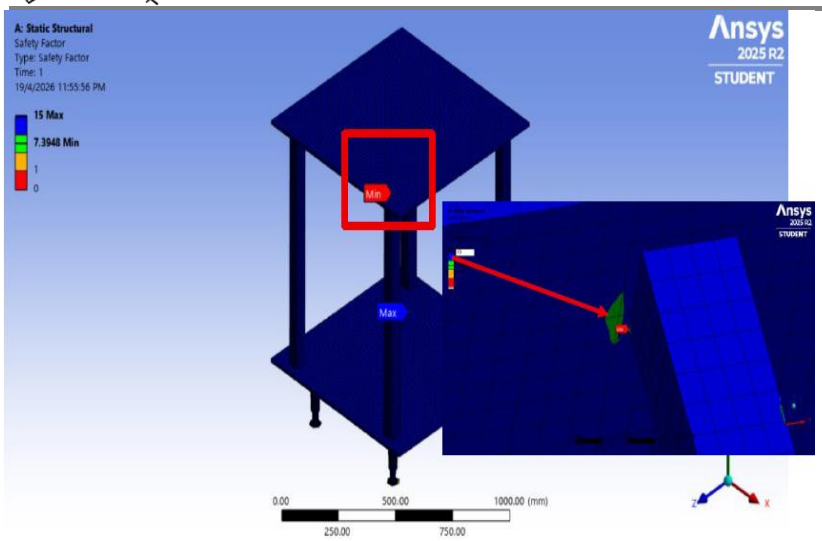

(c)

Prototype Testing and Analysis

Figure 3 shows the fabricated prototype where it is subjected to performance testing. At 5 m/s, the turbine produced 12.30 V, 0.06 A, and approximately 200 rpm, with battery voltage rising from 12.29 V to 12.31 V; at 14 m/s, it produced 12.57 V, 0.15 A, and approximately 385 rpm, with battery voltage increasing from 12.35 V to 12.43 V as shown in Table 3. Although electrical output was relatively low, the turbine operated effectively in generating power for battery charging. Comparing experimental with theoretical rotational speeds, the prototype achieved approximately 200 rpm at 5 m/s against a predicted range of 96 to 160 rpm, exceeding expectations possibly owing to reduced friction losses, an effective blade design, or favourable blower testing conditions, as well as the high starting torque of Savonius turbines at low wind speeds while at 14 m/s the experimental 385 rpm fell within the predicted range of 267 to 447 rpm.



Figure 3. Prototype fabrication

Table 3. Prototype testing results at 5 m/s and 14 m/s

Parameter	5 m/s	14 m/s
Current	0.06 A	0.15 A
Voltage	12.3 V	12.57 V

Electrical power	0.738 W	1.886 W
Rotational speed	~200 rpm	~385 rpm
Battery voltage before charge	12.29 V	12.35 V
Battery voltage after charge	12.31 V	12.43 V
Estimated charging time (12 V, 7 Ah battery)	~117 hours	~47 hours

Mechanical shaft power was evaluated through torque measurements. Using a measured rotational speed of 160.3 rpm, with the blower positioned one metre from the turbine, the mechanical power produced was determined to be 24.53 W. The experimental RPM results were compared with theoretical calculations and showed close agreement, validating the effectiveness of the proposed design. A limitation on current output arises from the selected motor type and pulley ratio: the configuration employs a 1:3 step-up pulley ratio, meaning the generator rotates three times for every single rotation of the turbine, and a higher current output would require a more efficient and costlier generator or a modified pulley ratio.

CONCLUSION

This project developed a small-scale Savonius VAWT prototype for Malaysia's low wind speed conditions. The development process concept generation, screening, Pugh analysis, weighted decision matrix selection, DFMA, FMEA, CFD and structural analysis selected Concept 8: a five-blade PVC Savonius rotor on a plywood and pinewood structure with a stepper motor generator, lead-acid battery and charge controller.The turbine operated at a low wind speed of 5 m/s, suitable for Malaysian conditions where average speeds lie between 2 and 5 m/s. DFMA reduced weight from 45.7 kg to 11.05 kg, prototype build time from 5 hours to 1.25 hours (with a 56.6% reduction in the worksheet-based assembly operation time from 341.37 s to 148.59 s), and worksheet operation cost from RM136.54 to RM59.44, while improving design efficiency from 6% to 14%. Structural and FEA analysis indicated high strength, acceptable deformation and a good factor of safety, and CFD and theoretical analysis confirmed the rotor's capability to generate useful torque at low wind speeds. The power coefficients of 0.19 and 0.17 fall within the range reported for conventional Savonius rotors, and the principal constraint on electrical output is the generator and transmission rather than the rotor, so the prototype met its objectives as an affordable, lightweight and reliable renewable energy source. Further work should test the 2–8 m/s range with torque and electrical output measured simultaneously at a logged wind speed, establish the cut-in speed, perform repetitions, carry out a mesh-independence study, and subject the blade material to accelerated UV and humidity ageing.

ACKNOWLEDGEMENT

The authors would like to thank Centre for Advanced Research on Energy, Universiti Teknikal Malaysia Melaka for technical support.

REFERENCES

1. Aboujaoude, H., Beaumont, F., Murer, S., Polidori, G., & Bogard, F. (2021). Aerodynamic performance enhancement of a Savonius wind turbine using an axisymmetric deflector. Journal of Wind Engineering and Industrial Aerodynamics, 220, 104882. https://doi.org/10.1016/j.jweia.2021.104882
2. Bianchini, A., Bangga, G., Baring-Gould, I., Croce, A., Cruz, J. I., Damiani, R., Erfort, G., Ferreira, C., Infield, D., Nayeri, C. N., Pechlivanoglou, G., Runacres, M., Schepers, G., Summerville, B., Wood, D., & Orrell, A. (2022). Current status and grand challenges for small wind turbine technology. Wind Energy Science, 7(5), 2003–2037. https://doi.org/10.5194/wes-7-2003-2022
3. Olivera, A. F., Chica, E., & Colorado, H. A. (2024). Design and Manufacturing with 3D Printing and Life Cycle Analysis of a Recyclable Polymer-Based H-Darrieus Wind Turbine. Engineered Science. https://doi.org/10.30919/es1156
4. Farozan, I., Soelaiman, T. A. F., Soetikno, P., & Indartono, Y. S. (2025). The effect of rotor aspect ratio, stages, and twist angle on Savonius wind turbine performance in low wind speeds environment. Results in Engineering, 25, 104041. https://doi.org/10.1016/j.rineng.2025.104041

5. Ferrari, G., Federici, D., Schito, P., Inzoli, F., & Mereu, R. (2017). CFD study of Savonius wind turbine: 3D model validation and parametric analysis. Renewable Energy, 105, 722–734. https://doi.org/10.1016/j.renene.2016.12.077
6. French, JJ, Ressler, CP, & Weigelt, JJ. "Manufacturing Optimization of a Kilowatt Scale Vertical Axis Wind Turbine for Remote Applications." Proceedings of the ASME 2013 7th International Conference on Energy Sustainability collocated with the ASME 2013 Heat Transfer Summer Conference and the ASME 2013 11th International Conference on Fuel Cell Science, Engineering and Technology. ASME 2013 7th International Conference on Energy Sustainability. Minneapolis, Minnesota, USA. July 14–19, 2013. V001T16A002. ASME. https://doi.org/10.1115/ES2013-18220
7. Li, M., Carroll, J., Ahmad, A. S., Hasan, N. S., Zolkiffly, M. Z., Falope, G. B., & Sabil, K. M. (2023). Potential of Offshore Wind Energy in Malaysia: An Investigation into Wind and Bathymetry Conditions and Site Selection. Energies, 17(1), 65. https://doi.org/10.3390/en17010065
8. Noman, F. M., Alkawsi, G. A., Umar, D. A., Alkahtani, A. A., Kiong, T. S., & Ekanayake, J. B. (2020). Comprehensive Review of Wind Energy in Malaysia: Past, Present, and Future Research Trends. IEEE Access, 8, 124526–124543. https://doi.org/10.1109/access.2020.3006134
9. Prabowo, H., Wijayanto, D. S., Saputra, T. W., et al. (2023). The Optimization of Savonius Helix Wind Turbine Cut-in Speed with the Variation of Blades-twist Rotor and Number of Blades. https://doi.org/10.20961/jiptek.v16i2.71389
10. Ricci, R. A., Romagnoli, R., Montelpare, S., et al. (2015). Experimental study on a Savonius wind rotor for street lighting systems. Applied Energy. https://doi.org/10.1016/j.apenergy.2015.10.012
11. Samrat, N. H., Ahmad, N., Choudhury, I. A., & Taha, Z. (2015). Technical Study of a Standalone Photovoltaic–Wind Energy Based Hybrid Power Supply Systems for Island Electrification in Malaysia. PLoS ONE, 10(6). https://doi.org/10.1371/journal.pone.0130678
12. Zakaria, A., & Ibrahim, M. S. N. (2020). Effect of twist angle on starting capability of a Savonius rotor – CFD analysis. IOP Conference Series: Materials Science and Engineering, 715, 012014. https://doi.org/10.1088/1757-899X/715/1/012014