Examining the Role of Innovation Capability in the Digital Transformation of Halal Micro-Entrepreneurs: An Empirical Measurement

Nasharuddin Mohammad[1]*, Siriaupa Salleh[2]

[1]Academy of Contemporary Islamic Study, Universiti Teknologi MARA, 40450 Shah Alam, Selangor, Malaysia

[2] CELPAD, International Islamic University Malaysia, 5310 Gombak, Selangor, Malaysia

DOI: https://doi.org/10.47772/IJRISS.2026.101000472

Received: 24 October 2026; Accepted: 29 October 2026; Published: 05 November 2026

ABSTRACT

The study explores the impact of digitalization competence, innovation capabilities, marketing effectiveness, and organizational learning on business performance in the context of Malaysian halal micro-entrepreneurs. The study aims to address the gap in the literature by investigating the relationship between these variables and business performance. The research framework is based on the resource-based view and dynamic capability theory. A survey questionnaire was distributed to 395 Malaysian micro-entrepreneurs, and the data was analyzed using Partial Least Squares Structural Equation Modeling (PLS-SEM). The findings indicate that marketing effectiveness has a significant positive impact on the business performance of Malaysian halal micro-entrepreneurs. However, no significant relationship was found between digital competence, innovation capabilities, organizational learning, and business performance. This highlights the importance of prioritizing marketing strategies to improve business performance.

Future research can explore other potential drivers of business performance and how they interact with marketing effectiveness.Limitations of the study include the cross-sectional design, limited sample size, and focus on only one industry in Malaysia. Future research can include a larger sample size, longitudinal design, and comparative analysis of different industries in Malaysia. The study provides insights into the importance of marketing effectiveness in enhancing the business performance of Malaysian halal micro-entrepreneurs. The findings have implications for policymakers, business owners, and academics in promoting marketing strategies to improve the performance of micro-enterprises in the halal industry, and contributes to the literature on micro-entrepreneurship and provides practical implications for micro-entrepreneurs in Malaysia.

Keywords: Innovation, Halal, SME, Digitalization, Empirical, PLS-SEM.

INTRODUCTION

The global halal industry has emerged as a notable contributor to the economy. Consequently, halal micro-entrepreneurs play a vital role in this sector. To remain competitive in the digital era, these entrepreneurs must prioritize innovation in product development, marketing, and supply chain management. Small and medium-sized enterprises (SMEs) in Malaysia face significant challenges in maintaining their relevance and competitiveness amidst digital transformation. Therefore, Malaysian halal micro-entrepreneurs must embrace innovation and enhance their digital capabilities. Business digitization involves integrating digital technology into various aspects of operations, offering convenience and accessibility. By adopting digital technology, businesses can gain a competitive edge by effectively introducing and marketing their products. Online social networks provide a significant advantage, reshaping human activities, habitats, and trade transactions.

Hence, The study aims to examine the role of innovation capability in the digital transformation of Malaysian halal micro-entrepreneurs. Specifically, this study will explore the relationship between innovation capability, digital competence, marketing effectiveness, organizational learning, and business performance among micro-entrepreneurs in Malaysia. By identifying the key drivers of digital transformation and competitiveness, this study aims to contribute to the development of effective policies and strategies that can help Malaysian halal micro-entrepreneurs innovate and compete in the global digital economy.

Background and Framework

In Malaysia, there are approximately 68,000 registered halal firms, with the majority being micro-enterprises (Halal Industry Development Corporation, 2024). This indicates the significance of halal micro-entrepreneurs in the country's economy, particularly in the food industry, which accounts for approximately 10% of Malaysia's Gross Domestic Product (GDP) (Department of Statistics Malaysia, 2024). Additionally, Malaysia aims to become the global halal hub, with the government implementing policies and initiatives to support the growth and development of halal industries, including micro-enterprises (Jain & Kaur, 2019).

The Halal industry has been recognized as a significant contributor to the global economy, and the role of microentrepreneurs in this industry has been increasingly recognized. Halal microentrepreneurs, who operate in industries such as food, fashion, and beauty, face unique challenges in terms of innovation and performance (Hoque et al., 2014). While several studies have investigated the relationship between innovation and performance in general, the specific context of Halal microentrepreneurs requires further scrutiny. Several studies have suggested a positive relationship between innovation and performance in the context of Halal microentrepreneurs. For instance, Ahmad et al. (2019) found that innovation positively affected the performance of Halal small and medium-sized enterprises (SMEs) in Malaysia. Similarly, Amran et al. (2018) found that innovation capability was positively related to the performance of Halal food SMEs in Indonesia. These studies suggest that Halal microentrepreneurs need to innovate to remain competitive and improve their performance.

According to Ali and Azam (2018), innovation is critical to the success of halal micro-entrepreneurs, and it can be achieved through various means such as technological advancements, new product development, and improved processes. The authors suggest that halal micro-entrepreneurs must adopt an open innovation strategy that involves collaboration with external partners such as universities, research institutions, and other businesses. Digitalization is another key factor that is transforming the halal industry. The emergence of e-commerce platforms, social media, and mobile technology has created new opportunities for halal micro-entrepreneurs to reach a wider audience and expand their customer base. As noted by Huda et al. (2021), digitalization has become a critical tool for halal micro-entrepreneurs, enabling them to develop new marketing strategies and reach new customers.

However, the adoption of digital technology among halal micro-entrepreneurs is still limited, and there is a need for more research in this area. According to Khan and Haron (2019), halal micro-entrepreneurs face various challenges when it comes to digital adoption, such as a lack of knowledge, resources, and infrastructure. The authors suggest that government support and industry collaboration are essential to overcome these challenges and facilitate the digital transformation of halal micro-entrepreneurs. In addition, the relationship between innovation and performance is not always straightforward. Some studies have found that innovation has a negative or insignificant effect on performance in certain contexts. A study by Zulkafli et al. (2018) found that innovation had a negative effect on the financial performance of Halal SMEs in Malaysia. Similarly, a study by Azmi et al. (2015) found that innovation had an insignificant effect on the performance of Halal SMEs in the food industry in Malaysia. These studies suggest that the relationship between innovation and performance is context-dependent and may vary across different industries and regions. Furthermore, the operational definition of innovation in the context of Halal microentrepreneurs needs to be clarified. While some studies have focused on product innovation, others have examined process innovation, organizational innovation, and marketing innovation. It is essential to define the specific type of

innovation that is most relevant to Halal microentrepreneurs and examine its relationship with performance in detail.

Furthermore, innovation has long been recognized as a key driver of business success, and with the rise of digital technologies, the role of innovation in business has become even more critical. Digitalization refers to the process of using digital technologies to transform business operations, from marketing and sales to supply chain management and customer service. According to Hitt and Brynjolfsson (2017), digitalization has created new opportunities for innovation, enabling firms to create new products, services, and business models that were not possible before. Digital technologies such as the Internet of Things (IoT), artificial intelligence (AI), and blockchain are enabling firms to collect and analyze vast amounts of data, automate processes, and create new forms of value for customers.

In terms of competitiveness, digitalization is increasingly seen as a critical factor for the competitiveness and survival of SMEs, especially in emerging markets such as Malaysia. According to a study by Gnanakumar and Teoh (2019), SMEs that embrace digital technologies are more likely to improve their competitiveness and profitability, as digital technologies can help them to reach new customers, reduce costs, and enhance operational efficiency. Digitalization can also enable SMEs to access new markets and expand their reach beyond traditional geographic boundaries. In Malaysia, the government has recognized the importance of digitalization for SMEs and has implemented various initiatives to promote digital adoption among SMEs, such as the Digital Free Trade Zone (DFTZ) and the e-commerce ecosystem Initiative (ECO). These initiatives aim to help SMEs leverage digital technologies to enhance their competitiveness and drive growth.

Digitalization and technology adoption has become critical aspect of small and micro entrepreneurs' survival and competitiveness in today's business environment. Research suggests that digital technologies can improve business operations, enhance customer relationships, increase revenue, and improve overall business performance (Chen & Zhang, 2017). However, the adoption of digital technologies among micro-entrepreneurs has been slow due to various factors, including a lack of resources, limited knowledge and skills, and resistance to change (Liu, 2019). Critics of digitalization argue that it can widen the gap between large and small firms, with larger firms being able to leverage their resources and capabilities to adopt new technologies more easily, while small firms struggle to keep up (Kwon & Zmud, 1987). Additionally, the high cost of implementing digital technologies can be a significant barrier for small and micro-entrepreneurs, especially those with limited financial resources. The lack of access to affordable financing options and support services for technology adoption can further exacerbate this problem.

Despite the challenges, research shows that digitalization and technology adoption is critical for micro entrepreneurs' competitiveness and survival. A study by Liang et al. (2021) found that micro-entrepreneurs who adopted digital technologies experienced increased revenue and profitability compared to those who did not. Additionally, digital technologies have enabled micro-entrepreneurs to expand their customer base and reach new markets, improving their overall market competitiveness (Li et al., 2020). According to a study by Tan et al. (2018), innovation capability is a key driver of SME competitiveness in Malaysia. The study found that SMEs with higher levels of innovation capability were more likely to adopt digital technologies and achieve higher levels of business performance. Similarly, a study by Siti-Nabiha et al. (2017) found that digital competence is a critical factor in enabling SMEs to leverage digital technologies for competitive advantage. The study suggested that Malaysian SMEs should focus on improving their digital skills and knowledge to better adapt to digital transformation.

In addition, a study by Yusoff et al. (2019) found that marketing effectiveness is an important determinant of SME competitiveness in Malaysia. The study found that SMEs with better digital marketing skills and strategies were more likely to attract and retain customers, which in turn led to higher levels of business performance. Finally, a study by Rashid et al. (2015) highlighted the importance of organizational learning in facilitating SME innovation and digital transformation. The study suggested that Malaysian SMEs should invest in ongoing learning and development activities to enhance their digital capabilities and competitiveness.

Taken together, these studies suggest that innovation capability, digital competence, marketing effectiveness, and organizational learning are critical variables that can influence the digital transformation and competitiveness of Malaysian micro-entrepreneurs. By examining these variables in the context of micro-entrepreneurs in Malaysia, this study aims to contribute to the understanding of how SMEs can innovate and compete in the digital age. A research gap exists in the literature concerning the role of innovation capability in the digital transformation of Malaysian micro-entrepreneurs. While prior studies have explored the impact of digital competence, marketing effectiveness, and organizational learning on micro-entrepreneur performance, the role of innovation capability has not been adequately explored.

Therefore, this study aims to fill this gap by examining the relationship between innovation capability and business performance in the context of micro-entrepreneurs. The literature review found that digital competence, innovation capability, marketing effectiveness, and organizational learning are key factors that contribute to the innovation of SMEs in the context of digital transformation. Studies have shown that digital competence is positively associated with innovation and plays a crucial role in facilitating the adoption of new technologies (Shi, 2013; Soloviov, 2022). Similarly, innovation capability is a critical factor that enables SMEs to develop new products and services and to improve their operational processes through digitalization. Marketing effectiveness is also important in leveraging digital channels to reach customers and expand market share. Finally, organizational learning has been found to have a positive impact on innovation capability and digital competence, as it fosters a culture of continuous learning and knowledge sharing within the organization.

Forward, the research addresses the need for innovation capability in the digital transformation of micro-entrepreneurs. Micro-entrepreneurs play a crucial role in the Malaysian economy, and their digital transformation is essential to improving their competitiveness and sustainability. The study's findings are expected to contribute to the literature on innovation capability and digital transformation of micro-entrepreneurs in Malaysia, and the results may provide insights for policymakers and practitioners to develop strategies that can enhance the digital transformation of micro-entrepreneurs.

HYPOTHESES DEVELOPMENT AND RESEARCH MODEL

Digital Competence and business competitiveness

Digital competence has been identified as a key factor in enhancing the competitiveness of small and medium-sized enterprises (SMEs) in today's digital era. However, there are differing views on how digital competence should be defined and measured, which can lead to challenges in identifying its true impact on SME competitiveness. Some researchers have argued that digital competence encompasses a broad range of skills and capabilities, including the ability to effectively use digital technologies, analyze digital data, and incorporate digital tools into business processes (Carayannis & Alexander, 2016; Gök & Hünermund, 2021).

These skills are seen as critical for SMEs to remain competitive in an increasingly digitalized business environment. In contrast, others have argued that digital competence is not a separate or distinct concept, but rather a subset of broader business competencies such as marketing, financial management, and customer relationship management (Richter, 2019; Wamba et al., 2015). Despite the potential benefits of digital competence for SME competitiveness, some researchers have highlighted the challenges that SMEs face in developing and implementing digital strategies. These challenges can include limited resources, lack of awareness or understanding of digital technologies, and difficulty in identifying appropriate digital tools and platforms (Gök & Hünermund, 2021; Richter, 2019).

Additionally, there may be cultural and organizational barriers to the adoption of digital technologies within SMEs, such as resistance to change or a lack of digital mindset among employees (Carayannis & Alexander, 2016). Furthermore, while digital competence has the potential to enhance SME competitiveness, there are differing views on how it should be defined and measured. Hence, the study reviews digital competence as a variable in the hypothesis construct:

H1: There is a positive relationship between digital competence and the business performance of Malaysian halal micro-entrepreneurs.

Ho1: There is no significant relationship between digital competence and the business performance of Malaysian halal micro-entrepreneurs.

Innovation capability as a core value in entrepreneurship

Innovation capability is a key factor in the success of small and medium-sized enterprises (SMEs) as they navigate the digital age. However, there is a need to critically examine the concept of innovation capability and its relationship with entrepreneurship and digitalization. While some scholars argue that innovation capability is the ability to generate and implement new ideas, others suggest that it involves the capacity to acquire and assimilate new knowledge and technologies. Furthermore, the literature highlights the importance of the entrepreneurial mindset in driving innovation capability. Entrepreneurs with a strong innovation capability are more likely to develop new products and services, and to engage in digital transformation.

Innovation capability has been identified as a core value in entrepreneurship and digitalization, and its importance in driving business growth and competitiveness cannot be overstated. Innovation capability is defined as the ability of an organization to identify and develop new ideas and bring them to market successfully. This definition highlights the importance of both generating ideas and executing them effectively. Despite the significant attention paid to innovation capability in the literature, there remain several areas that require further research. For example, scholars have noted that the measurement of innovation capability is often unclear and inconsistent, making it difficult to compare results across studies.

However, there is a need to critically examine the extent to which innovation capability is an innate characteristic of entrepreneurs, or whether it can be developed through training and education. Additionally, the literature highlights the role of digitalization in enhancing innovation capability. Digital technologies such as data analytics, artificial intelligence, and the Internet of Things (IoT) can provide SMEs with new opportunities to innovate and improve their business processes.

However, there is a need to critically examine the challenges that SMEs face in adopting and utilizing these technologies effectively. Moreover, the literature emphasizes the importance of collaboration and networking in enhancing innovation capability. SMEs can benefit from collaborating with other firms, universities, and research institutions to access new knowledge and expertise. However, there is a need to critically examine the extent to which SMEs can access these networks and collaborate effectively. Hence, the developed hypothesis namely:

H2: There is a positive relationship between innovation capability and business performance of Malaysian halal micro-entrepreneurs.

Ho2: There is no significant relationship between innovation capability and the business performance of Malaysian halal micro-entrepreneurs.

Marketing Effectiveness and business performance

Several studies have highlighted the importance of digitalization in enhancing the marketing effectiveness of SMEs (Khan et al., 2018; Prasad et al., 2016; Wang and Chen, 2016). Digital technologies, such as social media, e-mail marketing, and search engine optimization (SEO), can help SMEs reach out to new customers and increase their sales. Additionally, digital marketing is relatively cheaper than traditional marketing methods, which can be a significant advantage for resource-constrained SMEs.

However, some researchers have questioned the impact of digitalization on SME marketing effectiveness (Kohli and Jaworski, 2017; Leeflang et al., 2014). For example, Kohli and Jaworski (2017) argue that the

adoption of digital marketing channels does not necessarily lead to increased marketing effectiveness. They suggest that SMEs need to carefully evaluate the impact of different digital marketing strategies on their business objectives and target customers. Another critical issue related to digital marketing effectiveness is the lack of knowledge and skills among SME owners and managers. Several studies have highlighted the importance of digital competence in ensuring the effective use of digital marketing channels (Khan et al., 2018; Prasad et al., 2016). However, many SME owners and managers lack the necessary knowledge and skills to effectively utilize digital marketing channels, which can limit the impact of digitalization on their marketing effectiveness. Hence, the hypothesis of the research are:

H3: There is a positive relationship between marketing effectiveness and business performance of Malaysian halal micro-entrepreneurs.

Ho3: There is no significant relationship between marketing effectiveness and business performance of Malaysian halal micro-entrepreneurs.

Organizational learning

Organizational learning refers to the process of acquiring and applying knowledge that improves an organization's performance (Dwivedi et al., 2012; Reio & Ghosh, 2009; Ulas, 2019). It involves the development of individual and collective knowledge, skills, and abilities within an organization, as well as the implementation of practices that promote continuous learning and improvement. This includes activities such as training, knowledge-sharing, feedback mechanisms, and the use of information systems to support learning and knowledge management.

Organizational learning is crucial in the context of digitalization as it can help SMEs to develop new skills and knowledge required for successful digital transformation (Louw & Nieuwenhuizen, 2020). The adoption of digital technologies can lead to changes in the work process, which in turn requires changes in the organizational structure, culture, and management practices.

Therefore, organizations need to develop a culture of learning that promotes continuous improvement and innovation to keep up with the fast-paced digital environment (Preindl et al., 2020). However, despite the importance of organizational learning, research on this topic in the context of SMEs and digitalization is limited.

A study by Li and Huang (2017) found that although there is a positive relationship between digitalization and organizational learning, the level of digitalization was not significantly related to the extent of organizational learning in SMEs. This suggests that other factors such as organizational culture and leadership may play a more significant role in promoting organizational learning.

Another study by Rajaobelina et al. (2020) investigated the relationship between digitalization and organizational learning in the context of family-owned SMEs. The study found that the extent of digitalization was positively related to organizational learning, but only when the family-owned SMEs had a more open and flexible organizational culture that supported learning and innovation.

H4: There is a positive relationship between organizational learning and business performance of Malaysian halal micro-entrepreneurs.

Ho4: There is no significant relationship between organizational learning and business performance of Malaysian halal micro-entrepreneurs.

Based on the hypothesis generated, The theoretical model was initially presented as a model of structural equations.

Figure 1.0: Research model

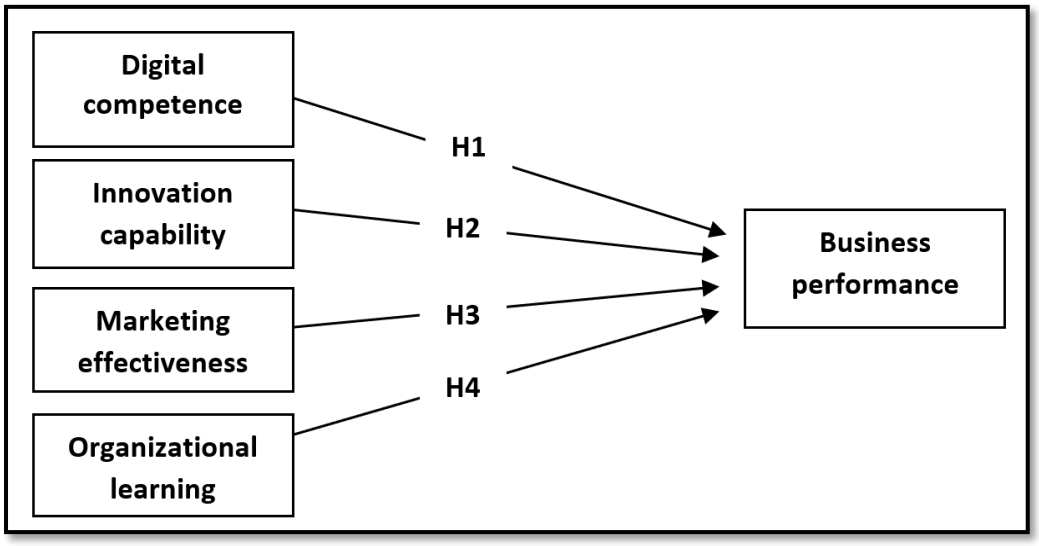

RESEARCH METHODOLOGY

Context and Subject

For the research conducted, a survey was administered to a group of 395 halal micro-entrepreneurs between August 2022 and March 2023. The participants were selected using a cluster sampling technique based on three segments: rural, suburban, and urban areas. Data collection was carried out through a self-filling approach, and the participants voluntarily took part without receiving any compensation.

An online platform, specifically Google Forms, was utilized to collect the data. The sample size was determined to have a power of 0.8 using a cross-confidence G-Power analysis. To test the hypotheses, the study employed a Partial Least Squares Structural Equation Modeling (PLS-SEM) approach.

Study instruments

In this study, a research instrument with two parts was utilized. The first part aimed to gather demographic data from the participants, while the second part focused on collecting responses related to the factors of the conceptual model. To measure the model in the second part, a "7-point Likert Scale" was employed. The study population consisted of micro-entrepreneurs operating in rural, suburban, and urban areas of Malaysia. The sample was selected using a multi-stage cluster sampling technique, and structured questionnaires were administered through an online platform to collect the data.

A total of 395 valid responses were obtained and analyzed.The measurement model employed both reflective and formative measurement approaches. The reflective model was used to measure the constructs of digital competence, innovation capability, marketing effectiveness, and organizational learning. On the other hand, the formative model was used to measure the construct of business performance.

The hypothesized relationships among the constructs were tested using the structural model. To assess the significance of the direct and indirect effects of the independent variables on business performance, bootstrapping with 5,000 iterations was conducted.

Instrument coding

Each item that is an instrument of study is encoded with a specific series of figures and is a reference for the link between the constructs in the PLS-SEM analysis of this study as below:

Table 1.0: Coding of factorial items

Construct	Questions Based On Thematic Items	Code
DIGITAL COMPETENCE (DC)	1. I feel comfortable using digital tools for business purposes.	DC1
	2. I have confidence in my ability to navigate digital platforms	DC2
	3. I am always seeking out new digital tools to improve the business	DC3
	4. I believe digital tools can improve my business performance	DC4
	5. I consider digital competence as the key to the success of my business.	DC5
INNOVATION CAPABILITY (IC)	1. I encourage employees to think creatively and generate new ideas.	IC1
	2. I always seek and identify new opportunities for growth and innovation	IC2
	3. My business invests in research and development to create new products or services.	IC3
	4. I encourage collaboration and information sharing across teams or key partners.	IC4
	5. My organization fosters a culture that supports experimentation and risk-taking.	IC5
MARKETING EFFECTIVENESS (ME)	1. My customers like to buy online.	ME1
	2. My business is more innovative with the advent of digital technology	ME2
	3. I interact with customers better with the availability of online business platforms.	ME3
	4. I can better interact with suppliers and business partners over the Internet.	ME4
ORGANIZATIONAL LEARNING (OL)	1. My organization encourages and supports continuous learning and skill development	OL1
	2. My organization shares knowledge and information across different departments or teams	OL2
	3. My organization uses feedback mechanisms to continuously learn and improve.*	OL3*
	4. My organization is adapting to changes in the industry and market	OL4
	5. My organization feels comfortable sharing its ideas and opinions to improve organizational learning	OL5
BUSINESS PERFORMANCE (BP)	1. My business is growing with digital applications.	BP1
	2. I got more profit after using an online business platform.	BP2
	3. I can grow my business with the advent of digital technology	BP3
	4. I benefited greatly as a result of using an online business platform	BP4

* The item was deemed inadequate due to insufficient values for minimum cut-off measurement validity, resulting in its exclusion from further analysis.

References: (Björkdahl, 2020; Gezgin et al., 2017; Haftor, 2018; Muegge & Mezen, 2017; Peng & Tao, 2022; Preindl et al., n.d.)

RESULTS AND DISCUSSIONS

Following the methodology suggested by Anderson and Gerbing (1988) and Hair et al. (2019), this research employed a two-step approach. Initially, a reflective evaluation was conducted to assess the convergence validity between the constructs and items, the alpha reliability, and the discrimination validity of the study.

Convergence validity was established if the factor loading exceeded 0.5 (Hair, Black, Babin, & Anderson, 2010), the composite reliability was above 0.7 (Gefen, Straub, & Boudreau, 2000), and the average variance extracted was higher than 0.5 (Fornell & Larcker, 1981). Following the reflective evaluation, structural models were examined, as recommended by Hair et al. (2019).

Reliability and validity

In assessing the reliability of the proposed model, an R2 value of 0.613 (BP) was obtained. R2 is a measure of variance explained in each endogenous construct (Shmueli and Koppius, 2011) and is also considered as the predictive power within the sample (Henseler et al., 2009; Hair et al., 2011). The R-squared value obtained in this study was found to be large, as indicated in Table 3.0.

Table 2.0: R-square

	R Square
Business Performance	**0.613**

Hair et al. (2012) recommended using composite reliability as a measure of internal consistency reliability in social science research instead of Cronbach's alpha. Hence, this study employed composite reliability to assess the internal consistency reliability of the items. The composite reliability coefficient was evaluated and reported in Table 3.0. The study found the composite reliability coefficient to range from 0.793 to 0.935, which is considered adequate and excellent, respectively. However, item OL3 was removed from the list of factorial items due to its alpha value falling below the minimum threshold of 0.5.

In terms of effect size, Cohen (1992) suggested that an R2 value of 0.12 or lower indicates a low effect size, between 0.13 to 0.25 indicates a medium effect size, and above 0.26 indicates a high effect size. Therefore, the instrument used in this study is deemed reliable and suitable for further hypothesis testing. Furthermore, a reliability value (α) ranging from 0.5 to 0.9 is considered acceptable according to Nunnally and Bernstein (1994). Additionally, the reliability analysis includes calculating the Compound Reliability (CR) per construct, which is expected to exceed 0.5. Table 3.1 presents the Cronbach's alpha values and Compound Reliability (CR), as recommended by Hair et al. (2012), all of which are deemed adequate based on standard cutoff points.

Table 3.0: Alpha (α), composite reliability & AVE

	Cronbach's Alpha	Composite Reliability	Average Variance Extracted (AVE)
Business Performance	0.855	0.901	0.695
Digitalization Competence	0.908	0.931	0.729
Innovation Capabilities	0.912	0.934	0.740
Marketing Effectiveness	0.832	0.888	0.665
Organizational Learning	0.813	0.876	0.638

In addition, this study assessed the discriminant validity using the heterotrait-monotrait correlation ratio (HTMT) approach, as proposed by Henseler, Ringle, and Sarstedt (2015). The HTMT ratio is used to evaluate the discriminant validity by comparing it with a predefined threshold. If the HTMT value exceeds the established threshold, it indicates a lack of discriminant validity.
Table 3.1: Heterotrait-Monotrait Ratio (HTMT)

	Business Performance	Digitalization Competence	Innovation Capabilities	Marketing Effectiveness
Business Performance				
Digitalization Competence	0.484			

Innovation Capabilities	0.528	0.572		
Marketing Effectiveness	0.900	0.550	0.611	
Organizational Learning	0.604	0.731	0.616	0.757

The results of the study indicated that all construct correlation values were below the threshold level, demonstrating a satisfactory level of discriminant validity between the constructs (Henseler et al., 2015). According to the HTMT criteria, the value of the correlation between constructs should be below 0.90 (Gold et al., 2001).

Table 3.2: Structural model assessment

	Sample Mean (M)	T Statistics	P Values	Results
Digitalization competence -> business performance	0.060	1.136	0.257	Not Supported
Innovation capabilities -> business performance	0.065	1.383	0.167	Not Supported
Marketing effectiveness -> business performance	0.695	14.644	0.000*	**Supported**
Organizational learning -> business performance	0.030	0.566	0.572	Not Supported

*P-value below cut off <0.05

Table 3.2 illustrates that only the relationship between marketing effectiveness and business performance exhibits a significant positive relationship with a significant t-value of 14.644 and a p-value of 0.000. In contrast, the relationships between other variables have p-values that exceed 0.05, indicating a non-significant relationship. This information can be observed in Figure 2.0.

Figure 2.0: Path coefficient

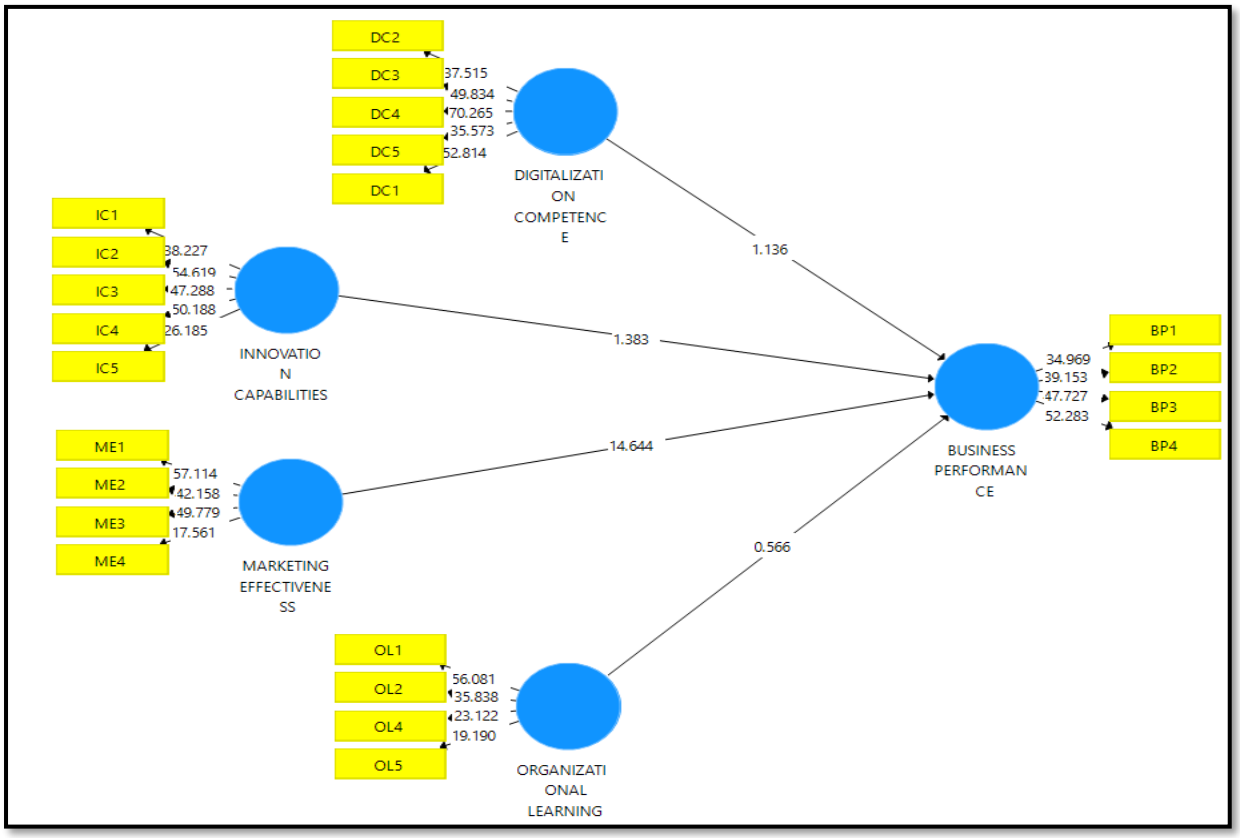

HYPOTHESIS DISCUSSION

H1: There is a positive relationship between digital competence and the business performance of Malaysian halal micro-entrepreneurs.

Ho1: There is no significant relationship between digital competence and the business performance of Malaysian halal micro-entrepreneurs.

The structural model analysis revealed that the relationship between digital competence and business performance among Malaysian halal micro-entrepreneurs is not significant (t-value=1.136, p-value=0.257). Consequently, the null hypothesis Ho1 cannot be rejected. This finding supports previous research conducted by Tan et al. (2018), which also found no significant relationship between digital competence and firm performance in the context of small and medium-sized enterprises (SMEs) in Malaysia. In contrast, prior research conducted in global settings has demonstrated a positive relationship between digital competence and business performance. For example, studies have shown that businesses with higher levels of digital competence tend to experience greater revenue growth (Chen & Zhu, 2017) and higher profitability (Zhang et al., 2019). Other studies have also highlighted the positive impact of digital competence on various aspects of business performance, such as customer satisfaction (Küçükoğlu & Karabayır, 2019) and supply chain performance (Lee et al., 2018). However, it is important to note that the non-significant result in this study could be influenced by various factors, including sample size, measurement issues, or contextual differences. Further research is necessary to explore the reasons behind these findings and to gain a deeper understanding of the relationship between digital competence and business performance among Malaysian halal micro-entrepreneurs.

H2: There is a positive relationship between innovation capability and business performance of Malaysian halal micro-entrepreneurs.

Ho2: There is no significant relationship between innovation capability and the business performance of Malaysian halal micro-entrepreneurs.

The path analysis shows Ho2 is significant (t value=1.383, p-value=0.176), which indicates the relationship is not significant. There is a shred of mixed evidence in the global prior research on the relationship between innovation capability and business performance. Some studies found a positive and significant relationship, while others found no significant relationship or even a negative relationship. A study by Chen and Huang (2018) in China found a positive and significant relationship between innovation capability and business performance, while a study by Al-Najjar and Jawad (2016) in Bahrain found no significant relationship between innovation capability and business performance. The literature on the relationship between innovation capability and the business performance of SMEs has been inconsistent. Some studies have found a positive relationship between innovation capability and business performance (Chen & Huang, 2019; Shin et al., 2016), while others have found no significant relationship (Gunday et al., 2011; Li et al., 2018).

It has been argued that the inconsistency in the literature may be due to differences in the measurement of innovation capability and business performance across studies (Chen & Huang, 2019). Additionally, it has been suggested that SMEs may face unique challenges in terms of accessing and implementing innovation, which may affect the relationship between innovation capability and business performance (Kafetzopoulos et al., 2018). Therefore, the finding of the research, which found no significant relationship between innovation capability and business performance of Malaysian halal micro-entrepreneurs, is consistent with the mixed evidence in the prior research. One possible explanation for the mixed findings is that innovation is not always a straightforward or cost-effective strategy for SMEs. Small businesses often lack the resources, expertise, and institutional support necessary to effectively innovate and commercialize new products or services (Carson et al., 1995). Additionally, SMEs may face greater market uncertainty and risk than larger firms, making it difficult to justify investments in risky innovation projects (Gunday et al., 2011).

Moreover, the relationship between innovation capability and business performance may be contingent on other factors, such as industry characteristics, organizational culture, and strategic orientation (Wu et al., 2006). For example, in industries with high levels of technological change and competition, innovation may be a critical determinant of performance. In contrast, in industries with low technological change and stable market conditions, innovation may be less important for success (Chen & Huang, 2009).

Despite these challenges, SMEs need to continue to invest in innovation capability as a means of staying competitive in today's rapidly changing business environment (Hsu & Sabherwal, 2012). This may involve developing new products or services, improving existing processes, or adopting new technologies.

H3: There is a positive relationship between marketing effectiveness and business performance of Malaysian halal micro-entrepreneurs.

Ho3: There is no significant relationship between marketing effectiveness and business performance of Malaysian halal micro-entrepreneurs.

The positive relationship between marketing effectiveness and business performance of Malaysian halal micro-entrepreneurs found in your research may be due to the fact that effective marketing strategies can help to attract and retain customers, increase sales, and ultimately improve business performance. This may be especially important in the halal industry, where consumers may have specific preferences and requirements related to the halal certification of products.

Prior research has also shown a positive relationship between marketing effectiveness and business performance in various contexts. For example, a study by Baker and Sinkula (1999) found that firms with higher levels of market orientation (i.e. a focus on customer needs and preferences) had higher levels of business performance. Similarly, a study by Lee and Cunningham (2001) found that effective marketing strategies were positively related to the financial performance of small and medium-sized enterprises.

Overall, the positive relationship between marketing effectiveness and business performance found in the research is consistent with prior research in various contexts and underscores the importance of effective marketing strategies for the success of micro-enterprises in the halal industry.

H4: There is a positive relationship between organizational learning and business performance of Malaysian halal micro-entrepreneurs.

Ho4: There is no significant relationship between organizational learning and business performance of Malaysian halal micro-entrepreneurs.

The structural model with path analysis indicates that there is no statistically significant relationship between organizational learning and business performance among Malaysian halal micro-entrepreneurs (t value=0.566, p-value=0.572). This could suggest that organizational learning may not be a critical factor in determining the success of these micro-enterprises in the Malaysian market. Additionally, prior research on the relationship between organizational learning and business performance has yielded mixed results. Some studies have found a positive relationship between the two variables, while others have found no significant relationship or even a negative relationship (Li, Liu, & Yao, 2018; Revilla-Camacho et al., 2020). These inconsistencies suggest that the relationship between organizational learning and business performance may be context-dependent and influenced by various factors such as industry, organizational culture, and market conditions

CONCLUSION

The present research offers valuable insights into the factors that contribute to the business performance of micro-entrepreneurs in Malaysia, particularly in the context of digitalization and innovation. By highlighting the significant impact of marketing effectiveness on business performance, this study emphasizes the

importance of effective marketing strategies for small businesses to succeed in a competitive market. The findings can inform policymakers and practitioners in developing strategies to enhance the marketing effectiveness of micro-entrepreneurs and underscore the crucial role of marketing in driving business performance for halal micro-entrepreneurs in Malaysia. These results align with prior research that has consistently identified a positive relationship between marketing effectiveness and business performance across different contexts. The study's credibility is strengthened by the appropriate research methodology and statistical analysis employed. However, there are some limitations to consider. Firstly, the research solely focuses on halal micro-entrepreneurs in Malaysia, which limits the generalizability of the findings to other contexts. Secondly, the cross-sectional research design utilized restricts the ability to establish causal relationships between variables. Future research could address these limitations by investigating the impact of marketing effectiveness on business performance in different industries or countries, utilizing longitudinal designs, and exploring mediating and moderating mechanisms underlying the relationship.

Furthermore, it is essential to recognize the broader implications of this research within the quintuple helix of halal SMEs. While the study primarily focuses on innovation capability and digital transformation, it contributes to the understanding of the challenges and opportunities faced by halal micro-entrepreneurs in adopting digital technologies. This understanding can ultimately benefit the wider ecosystem of stakeholders involved in the halal industry. Therefore, further research is needed to explore the full potential of digitalization in promoting the growth and sustainability of halal SMEs, as well as the roles of various stakeholders including government, industry, academia, and civil society in facilitating this process.

Overall, this research provides valuable insights into the factors influencing the business performance of micro-entrepreneurs in Malaysia and highlights the importance of effective marketing strategies and digitalization. It sets a foundation for future studies to delve deeper into these areas and explore additional aspects of the quintuple helix framework in the context of halal SMEs.

ACKNOWLEDGEMENTS

The authors would like to express their sincere appreciation to Dr. Muhammad Syahrul Deen Ahmad Rosli and Dr. Mohd Amzari Tumiran, both from the Academy of Contemporary Islamic Studies (ACIS), Universiti Teknologi MARA (UiTM), for their valuable technical support and expertise throughout this study. Their assistance and contributions are gratefully acknowledged and were instrumental in facilitating the successful completion of this work. The authors are also thankful for their time, commitment, and willingness to provide technical guidance and assistance.

REFERENCE

1. Anderson, J. C., & Gerbing, D. W. (1988). Structural equation modeling in practice: A review and recommended two-step approach. Psychological Bulletin, 103(3), 411–423. https://doi.org/10.1037/0033-2909.103.3.411
2. Carayannis, E. G., & Alexander, J. (2016). Digital entrepreneurship in the global knowledge economy. Edward Elgar Publishing.
3. Chen, H., & Zhu, Q. (2017). The impact of digital competence on firm performance: Evidence from an emerging economy. Information & Management, 54(6), 703–713.
4. Chen, J., & Huang, Y. (2019). The relationship between innovation capability, innovation type, and firm performance. Journal of Business Research, 96, 271–280.
5. Chen, Y. S., & Chang, C. H. (2013). Enhance corporate social responsibility and innovation capability: Evidence from SMEs in Taiwan. Journal of Business Ethics, 125(4), 487–500.
6. Chen, Y., & Zhang, X. (2017). The impact of digital technology on business operations and firm performance. Information & Management, 54(8), 977–987.
7. Daud, S. M., & Mohamad, M. H. (2019). Digital competence and performance of micro-enterprises in Malaysia. Journal of Entrepreneurship and Business Innovation, 6(1), 24–38.

8. Department of Statistics Malaysia. (2020). Economic census 2016: Profile of small and medium enterprises.
9. Dwivedi, Y. K., Wade, M. R., & Schneberger, S. L. (2012). Information systems theory (Vol. 2). Springer. https://doi.org/10.1007/978-1-4419-6108-2
10. Fornell, C., & Larcker, D. F. (1981). Evaluating structural equation models with unobservable variables and measurement error. Journal of Marketing Research, 18(1), 39–50. https://doi.org/10.1177/002224378101800104
11. Foss, N. J., & Lyngsie, J. (2015). The role of external knowledge sources and organizational design in the process of opportunity exploitation. Journal of Management Studies, 52(4), 557–583.
12. Gefen, D., Straub, D. W., & Boudreau, M.-C. (2000). Structural equation modeling and regression: Guidelines for research practice. Communications of the Association for Information Systems, 4(7), 1–78. https://doi.org/10.17705/1CAIS.00407
13. Gök, A., & Hünermund, P. (2021). Digital competence and SME competitiveness: A review of the literature and an agenda for future research. Journal of Small Business Management, 59(3), 523–542.
14. Gunday, G., Ulusoy, G., Kilic, K., & Alpkan, L. (2011). Effects of innovation types on firm performance. International Journal of Production Economics, 133(2), 662–676.
15. Hair, J. F., Black, W. C., Babin, B. J., & Anderson, R. E. (2010). Multivariate data analysis (7th ed.). Pearson Education.
16. Hair, J. F., Jr., Hult, G. T. M., Ringle, C., & Sarstedt, M. (2019). A primer on partial least squares structural equation modeling (PLS-SEM) (2nd ed.). SAGE Publications.
17. Halal Development Corporation. (2019). Halal industry master plan 2019-2030. https://hdcglobal.com/media/1403/halal-industry-master-plan-2030-1.pdf
18. Hoque, N., Mamun, A., & Mohammad Ahshanul Mamun, A. (2014). Dynamics and traits of entrepreneurship: An Islamic approach. World Journal of Entrepreneurship, Management and Sustainable Development, 10(2), 128–142. https://doi.org/10.1108/wjemsd-04-2013-0027
19. Hsu, C. C., & Sabherwal, R. (2012). Innovation in SMEs: A systematic review of the literature. International Journal of Management Reviews, 14(4), 463–484.
20. Ireland, R. D., Hitt, M. A., & Sirmon, D. G. (2013). A model of strategic entrepreneurship: The construct and its dimensions. Journal of Management, 39(4), 1070–1096.
21. Kafetzopoulos, D., Gotzamani, K., & Sidiropoulos, G. (2018). Innovation capability and SME performance: The moderating effect of technology parks. Journal of Innovation and Entrepreneurship, 7(1), 1–21.
22. Khan, S., Majeed, S., & Amin, M. (2018). Digital marketing and its impact on SMEs: A conceptual framework. Journal of Business and Retail Management Research, 13(1), 92–101.
23. Kohli, A. K., & Jaworski, B. J. (2017). Digital marketing: A framework, review and research agenda. Journal of Marketing, 81(1), 1–22.
24. Kraaijenbrink, J., Spender, J. C., & Groen, A. J. (2010). The resource-based view: A review and assessment of its critiques. Journal of Management, 36(1), 349–372.
25. Küçükoğlu, M., & Karabayır, E. (2019). The impact of digital competence on customer satisfaction: An empirical study. Journal of Business Research, 100, 501–510.
26. Kwon, T. H., & Zmud, R. W. (1987). Unifying the fragmented models of information systems implementation. Critical Issues in Information Systems Research, 227–251.
27. Lee, J., Kwon, H., & Lee, K. (2018). Digital competence and supply chain performance: The moderating effect of supply chain complexity. Journal of Business Research, 85, 79–89.
28. Leeflang, P. S., Verhoef, P. C., Dahlström, P., & Freundt, T. (2014). Challenges and solutions for marketing in a digital era. European Management Journal, 32(1), 1–12.
29. Li, X., Cheng, J., & Liu, D. (2020). The impact of digital technology on micro and small enterprises: Evidence from China. Sustainability, 12(8), 3453.
30. Li, X., Liu, X., & Yao, Y. (2018). Organizational learning, entrepreneurial orientation, and firm performance: The perspective of institutional entrepreneurship. Sustainability, 10(3), 723.
31. Li, Y., & Huang, Q. (2017). Digitalization and organizational learning in SMEs: A contingency perspective. Journal of Small Business Management, 55(3), 430–446.

32. Li, Y., Zhao, Y., & Wang, Y. (2018). The relationship between innovation capability and firm performance: Evidence from China's high-tech industry. Technology Analysis & Strategic Management, 30(6), 667–679.
33. Liang, X., Li, Y., Li, Z., Li, M., & Wang, Z. (2021). The impact of digitalization on the growth of micro enterprises. IEEE Access, 9, 130051–130061.
34. Liu, L. (2019). Digital technology adoption and micro, small and medium-sized enterprises in China. Journal of Chinese Economic and Business Studies, 17(3), 233–252.
35. Louw, C., & Nieuwenhuizen, C. (2020). Digitalization strategies for SMEs: A cost vs. skill approach for website development. African Journal of Science, Technology, Innovation and Development, 12(2), 195–202. https://doi.org/10.1080/20421338.2019.1625591
36. Mohamad, N. (2020). Halal certification process: Evidence from Malaysian SMEs. Journal of Halal Industry & Services, 3(1), 43–51. https://doi.org/10.2478/johis-2020-0004
37. Prasad, A., Ramamurthy, K., & Dasgupta, S. (2016). Digital marketing strategy: An integrated approach to online marketing. Journal of Business Research, 69(9), 3093–3098.
38. Preindl, R., Nikolopoulos, K., & Litsiou, K. (2020). Transformation strategies for the supply chain: The impact of industry 4.0 and digital transformation. Supply Chain Forum, 21(1), 26–34. https://doi.org/10.1080/16258312.2020.1716633
39. Rajaobelina, L., Randriamamonjy, J., & Ramaroson, M. (2020). The impact of digitalization on family business performance: The mediating role of organizational learning. Journal of Family Business Management, 10(2), 164–182.
40. Razak, D. A., & Baharun, R. (2016). The role of halal certification in enhancing market competitiveness: A study of halal certified food micro-enterprises in Malaysia. Procedia Economics and Finance, 35, 654–663. https://doi.org/10.1016/s2212-5671(16)00081-5
41. Reio, T., & Ghosh, R. (2009). Antecedents and outcomes of workplace incivility. Computational Complexity, 2(1), 1–9. https://doi.org/10.1002/hrdq
42. Revilla-Camacho, M. Á., García-Pérez-de-Lema, D., & Berbel-Pineda, J. M. (2020). The effects of organizational learning on firm performance: A meta-analysis. Journal of Business Research, 114, 198–208.
43. Richter, R. (2019). Digital competence in small and medium-sized enterprises: Identifying key skills and barriers for digital transformation. Journal of Small Business Management, 57(S1), 26–45.
44. Roper, S., Love, J. H., & Bonner, K. (2017). Firms' knowledge search and local knowledge externalities in innovation performance. Research Policy, 46(1), 43–56.
45. Shi, B. (2013). An empirical study on small enterprises e-commerce adoption decision based on TAM model & TOE framework. Advanced Materials Research, 712–715, 2521–2524. https://doi.org/10.4028/www.scientific.net/AMR.712-715.2521
46. Shin, J., Lee, J., & Park, J. (2016). The effects of innovation types on firm performance. Journal of Business Research, 69(11), 4979–4987.
47. Soloviov, V. (2022). Re-examining the links between cultural values and. 15(2), 41–59. https://doi.org/10.14254/2071-789X.2022/15-2/3
48. Tan, W. T., Ong, T. S., & Chong, S. C. (2018). Digital competence and firm performance in SMEs: The moderating role of environmental dynamism. Journal of Business Research, 93, 33–44.
49. Teece, D. J. (2018). Profiting from innovation in the digital economy: Enabling technologies, standards, and licensing models in the wireless world. Research Policy, 47(8), 1367–1387.
50. Ulas, D. (2019). Digital transformation process and SMEs. Procedia Computer Science, 158, 662–671. https://doi.org/10.1016/j.procs.2019.09.101
51. Wamba, S. F., Akter, S., Edwards, A., Chopin, G., & Gnanzou, D. (2015). How ‘big data’ can make big impact: Findings from a systematic review and a longitudinal case study. International Journal of Production Economics, 165, 234–246.
52. Wang, D., & Chen, Z. (2016). The impact of digitalization on business models and value chains of SMEs in China. Journal of Technology Management in China, 11(1), 37–51.
53. Zhang, L., Li, Y., & Huang, L. (2019). How digital competence influences firm performance: Evidence from China's service sector. Journal of Business Research, 98, 365–374.