Integrating Morphological Design and CFD Simulation to Enhance the Aerodynamic Performance of a Shell Eco-marathon Urban Concept Car

Irfan Fauzi Nor Affendi[1], Mohd Azman Abdullah[1,2], Shafizal Mat[1,2], Wan Mohd Farid Wan Mohamad[1,2], Nazri Md Daud[1,2], Nor Fazli Adull Manan[3]

[1]Fakulti Teknologi dan Kejuruteraan Mekanikal, Universiti Teknikal Malaysia Melaka, Hang Tuah Jaya, 76100 Durian Tunggal, Melaka, Malaysia

[2]Centre for Advanced Research on Energy (CARe), Universiti Teknikal Malaysia Melaka, Hang Tuah Jaya, 76100 Durian Tunggal, Melaka, Malaysia

[3]School of Mechanical Engineering, College of Engineering, Universiti Teknologi MARA, 40450 Shah Alam, Selangor, Malaysia

DOI: https://doi.org/10.47772/IJRISS.2026.101000549

Received: 27 October 2026; Accepted: 01 November 2026; Published: 07 November 2026

ABSTRACT

The development of energy-efficient vehicles for the Shell Eco-marathon requires a systematic design approach that integrates conceptual innovation with aerodynamic performance evaluation. This study presents the integration of morphological design and Computational Fluid Dynamics (CFD) simulation in the development of a Shell Eco-marathon Urban Concept car. A morphological chart was employed to systematically generate and combine alternative design solutions for key vehicle components, resulting in three conceptual vehicle configurations. The concepts were modelled using CATIA and subsequently evaluated through Autodesk CFD to examine their aerodynamic performance under a driving speed of 35 km/h. The k-ω Shear Stress Transport (SST) turbulence model was utilized to accurately predict external airflow behaviour and aerodynamic forces. The simulation results revealed notable differences in drag and lift characteristics among the proposed designs. Among the three concepts, Urban Car 3 demonstrated the best aerodynamic performance, recording a drag coefficient (C_D) of 0.411 and a lift coefficient (C_L) of 0.120, representing substantial improvements compared with the previous UTeM baseline design (C_D = 0.954, C_L = 0.897). The enhanced performance was attributed to the integration of a streamlined body profile, reduced frontal area, enclosed wheel arches, and a tapered rear geometry that improved pressure recovery and minimized flow separation. The findings demonstrate that combining morphological design with CFD-based evaluation provides an effective framework for developing aerodynamically efficient urban concept vehicles. This approach supports informed design decision-making and has the potential to contribute to improved vehicle energy efficiency through drag reduction.

Keywords: Morphological Design; Computational Fluid Dynamics (CFD); Aerodynamic Performance; Shell Eco-marathon; Urban Concept Vehicle; Energy Efficiency

INTRODUCTION

The Shell Eco-marathon is an international competition that challenges student teams to design and develop highly energy-efficient vehicles. Within the Urban Concept category, participating vehicles must resemble practical road-going cars while achieving maximum fuel efficiency. To meet these requirements, designers must balance multiple considerations, including aerodynamics, structural integrity, driver ergonomics, safety, and regulatory compliance. Among these factors, aerodynamic performance plays a crucial role because aerodynamic drag directly affects energy consumption, vehicle range, and overall competition performance (Abidin et al., 2023; Setyadi et al., 2024).

Aerodynamic forces acting on a vehicle are primarily characterized by drag and lift. Drag increases resistance to motion and consequently raises fuel consumption, whereas excessive lift can compromise vehicle stability and tyre-road contact. Previous studies have demonstrated that vehicle geometry significantly influences aerodynamic behaviour. Streamlined body profiles, reduced frontal areas, tapered rear sections, and enclosed wheel arches have been widely recognized as effective strategies for reducing drag and improving airflow characteristics. Abidin et al. (2023) reported that modifications to the vehicle nose curvature, windshield angle, and rear tapering could substantially reduce drag coefficients while maintaining acceptable lift characteristics. Similarly, Lee et al. (2022) found that improvements in canopy profile and wheel enclosure contributed significantly to aerodynamic efficiency, while Xia and Huang (2024) demonstrated that optimized body contouring reduced wake turbulence and enhanced overall vehicle performance.

To evaluate and improve vehicle aerodynamics efficiently, Computational Fluid Dynamics (CFD) has become an indispensable tool in automotive design and development. CFD enables designers to predict airflow behaviour, pressure distribution, and aerodynamic forces without the time and cost associated with multiple physical prototypes. Furthermore, CFD facilitates iterative design refinement by allowing numerous design alternatives to be analysed under consistent operating conditions. Previous studies have shown that CFD-based aerodynamic optimization can significantly reduce drag and improve vehicle efficiency through informed geometric modifications (Lee et al., 2022; Xia & Huang, 2024; Prabhu et al., 2025).

While numerous studies have focused on CFD-based aerodynamic optimization of Shell Eco-marathon and energy-efficient vehicles, most investigations have concentrated on evaluating and refining existing vehicle geometries (Abidin et al., 2023; Abo-Serie, 2017; Xia & Huang, 2024). Comparatively limited research has explored the integration of systematic concept generation methods with aerodynamic evaluation during the early stages of vehicle development. Concept generation is a critical phase in engineering design because decisions made at this stage largely determine the performance and feasibility of the final product. Morphological analysis offers a structured approach for generating alternative design concepts by decomposing a product into key functions and systematically combining potential solutions. This method promotes design creativity while maintaining a logical and traceable decision-making process throughout concept development (Pahl et al., 2007; Tenner, 2015). More recently, Chen et al. (2024) highlighted the growing importance of systematic concept generation techniques in enhancing innovation during engineering design activities, while Milovanovic et al. (2021) demonstrated that structured concept exploration contributes to more effective design outcomes.

The UTeM Shell Eco-marathon Urban Concept vehicle previously developed by the research team exhibited a relatively high drag coefficient due to its triangular body geometry, indicating substantial aerodynamic resistance and associated energy losses. Consequently, there is a need for a more systematic design approach that combines creative concept generation with quantitative aerodynamic evaluation to identify more efficient vehicle configurations. By integrating concept generation techniques and simulation-based assessment, design decisions can be supported by both engineering creativity and performance data.

Therefore, this study integrates morphological design and CFD simulation to develop and evaluate new Shell Eco-marathon Urban Concept vehicle configurations. A morphological chart was employed to generate alternative combinations of key vehicle components, resulting in three conceptual vehicle designs. The concepts were subsequently modelled using CATIA and analysed using Autodesk CFD under representative competition operating conditions. The objective of this study is to identify the most aerodynamically efficient vehicle configuration and demonstrate the effectiveness of integrating morphological design and CFD simulation as a systematic framework for developing energy-efficient urban concept vehicles.

METHODOLOGY

This study adopted a systematic design methodology integrating morphological analysis and Computational Fluid Dynamics (CFD) simulation to develop and evaluate an aerodynamically efficient Shell Eco-marathon Urban Concept vehicle. The methodology consisted of four principal stages: (i) concept generation through morphological analysis, (ii) conceptual design development, (iii) three-dimensional modelling using CATIA, and (iv) aerodynamic evaluation using Autodesk CFD. The integration of these stages enabled the generation of innovative design alternatives and their subsequent assessment based on aerodynamic performance. Structured

design approaches such as morphological analysis are widely used in engineering product development because they facilitate systematic exploration of design alternatives while supporting objective decision-making during the concept selection phase (Pahl et al., 2007; Tenner, 2015).

Morphological Analysis and Concept Generation

Concept generation is a critical stage in engineering design because decisions made during the early development phase have a substantial impact on the final product performance and functionality. To facilitate systematic exploration of alternative solutions, a morphological chart was employed. Morphological analysis decomposes a product into several key functions and identifies multiple solution alternatives for each function, allowing designers to generate numerous concept combinations in a structured manner (Pahl et al., 2007).

In this study, three primary design elements were identified: the bonnet, rear-end geometry, and body shell

configuration. Four alternative designs were proposed for each element and organized within a morphological chart, as shown in Table 1. Different combinations of these elements were then systematically evaluated to generate conceptual vehicle configurations. This approach encouraged design creativity while ensuring that concept development remained aligned with the project objectives and competition requirements. Recent studies have highlighted that structured concept generation techniques contribute significantly to innovation and improve the quality of engineering design outcomes (Milovanovic et al., 2021; Chen et al., 2024).

Table 1. Morphological chart

Function	Option			
	1	2	3	4
Bonnet	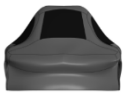			
Rear-end				
Body Shell				

Three concept configurations were generated by combining the highest-potential design features identified from the morphological analysis. The selection process considered aerodynamic principles reported in previous studies, manufacturability, driver accommodation requirements, and compliance with Shell Eco-marathon Urban Concept regulations. Rather than evaluating every possible combination, three representative concepts were developed to capture distinct design philosophies and enable comparative CFD assessment.

Conceptual Design Development

Three conceptual vehicle designs, namely Urban Car 1, Urban Car 2, and Urban Car 3, were developed from selected combinations identified through the morphological analysis process. The concept development stage considered aerodynamic efficiency, manufacturability, driver accommodation, and compliance with Shell Eco-marathon Urban Concept regulations. An existing Shell Eco-marathon vehicle previously developed by the UTeM team was used as a baseline reference during the design process as shown in Figure 1.

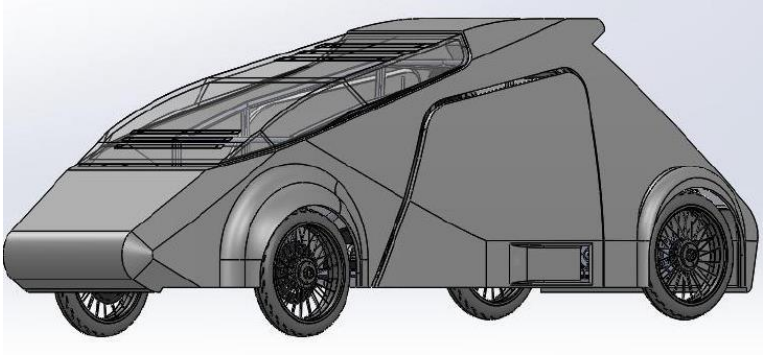

Figure 1. Previous design of UTeM Shell Eco-marathon urban concept car

Analysis of the baseline vehicle indicated relatively poor aerodynamic performance due to its triangular body profile, which contributed to increased aerodynamic drag. Previous studies have demonstrated that streamlined vehicle geometries exhibit lower drag coefficients and improved airflow characteristics compared to triangular or abruptly terminated profiles (Abo-Serie, 2017; Lee et al., 2022). Consequently, the newly developed concepts incorporated features such as smoother canopy transitions, enclosed wheel arches, reduced frontal areas, and tapered rear sections to improve aerodynamic performance (Figure 2).

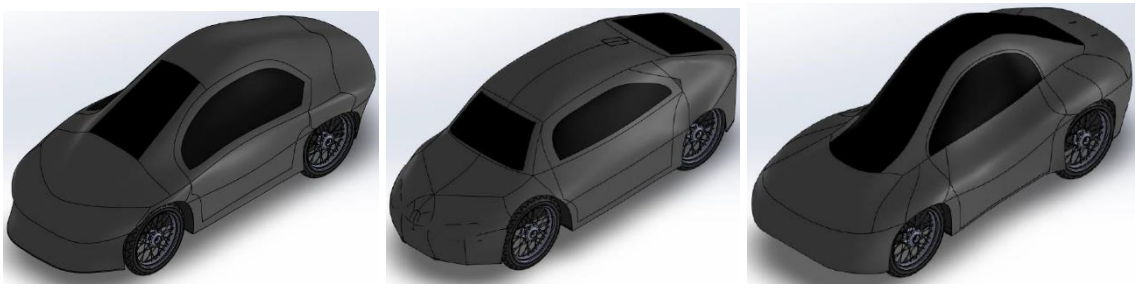

(a) Urban Car 1 (b) Urban Car 2 (c) Urban Car 3

Figure 2. Conceptual design of urban car

The selected concepts were subsequently modelled as three-dimensional computer-aided design (CAD) models using CATIA software. Detailed vehicle geometries were created to ensure accurate representation of body contours and aerodynamic features prior to simulation.

Computational Fluid Dynamics (CFD) Simulation

The aerodynamic performance of the conceptual vehicle designs was evaluated using Autodesk CFD. CFD has become a widely accepted design tool for analysing airflow behaviour around automotive structures because it provides detailed information regarding pressure distribution, velocity fields, and aerodynamic forces while reducing the need for extensive physical prototyping (Xia & Huang, 2024; Prabhu et al., 2025).

A computational domain was established around each vehicle model to simulate external airflow conditions. To minimise boundary interference and blockage effects, sufficient clearance was maintained between the vehicle and the domain boundaries. The simulations were performed at an inlet velocity of 35 km/h, corresponding to the average operating speed of Shell Eco-marathon Urban Concept vehicles reported in previous studies (Abidin et al., 2023). Atmospheric pressure was assigned at the outlet boundary to represent realistic open-road conditions. The side and upper surfaces of the computational domain were treated as symmetry boundaries, while the vehicle surfaces were assigned no-slip wall conditions to accurately represent the interaction between the airflow and the body structure.

To improve simulation accuracy, mesh refinement was applied in regions characterised by significant flow interaction, including the front fascia, wheel arches, canopy region, underbody, and rear body section. These areas are particularly susceptible to flow separation and turbulence formation, which significantly influence

aerodynamic performance. The mesh consisted of unstructured elements with additional local refinement in critical flow regions to capture velocity gradients and wake development. The aerodynamic coefficients were monitored throughout the simulation process to ensure solution consistency. Although a formal mesh-independence study was beyond the scope of this work, iterative mesh refinement was performed until stable aerodynamic coefficient predictions were obtained with no significant variations between successive simulations.

The airflow behaviour was modelled using the k-ω Shear Stress Transport (SST) turbulence model, which combines the advantages of the k-ω formulation near wall surfaces with the k-ε model in free-stream regions. The SST model has been widely recognised as suitable for external vehicle aerodynamics and flow-separation prediction (Menter, 1994; Lee et al., 2022). Furthermore, the model provides improved prediction of adverse pressure gradients and separated flow regions commonly encountered in streamlined vehicle bodies.

All simulations were conducted under steady-state conditions. Convergence was achieved when the residual values reached the prescribed solver criteria and the calculated drag and lift coefficients exhibited negligible variation with additional iterations. The aerodynamic performance of each concept was subsequently evaluated based on the predicted drag coefficient (C_D) and lift coefficient (C_L), which are widely accepted indicators of vehicle aerodynamic efficiency and aerodynamic loading characteristics.

The CFD analysis was intended to provide a comparative assessment of the aerodynamic behaviour of the developed concepts. Therefore, the reported drag and lift coefficients represent numerical predictions under controlled simulation conditions. While lower drag and lift coefficients may indicate the potential for improved energy efficiency and vehicle stability, these benefits were not experimentally validated in the present study and should be interpreted as indicative trends rather than direct performance measurements.

Aerodynamic Performance Evaluation

The simulations generated aerodynamic force data including drag force (F_D) and lift force (F_L) acting on each vehicle configuration. These values were subsequently used to calculate the coefficient of drag (C_D) and coefficient of lift (C_L), which served as the primary performance indicators for comparison.

The drag coefficient was determined using:

$$C_D = \frac{F_D}{A\frac{\rho v^2}{2}} \quad (1)$$

where F_D is the drag force, ρ is the air density, V is the vehicle velocity, and A is the frontal area.

Similarly, the lift coefficient was calculated using:

$$C_L = \frac{F_L}{A\frac{\rho v^2}{2}} \quad (2)$$

where F_L represents the aerodynamic force.

The calculated values of C_D and C_L were compared across all design configurations to identify the most aerodynamically efficient concept. Lower drag coefficients indicate reduced aerodynamic resistance and improved energy efficiency, whereas lower lift coefficients indicate enhanced vehicle stability and road-holding capability (Abidin et al., 2023; Xia & Huang, 2024). The concept demonstrating the lowest aerodynamic coefficients was identified as the preferred design for future development and competition implementation.

RESULTS AND DISCUSSION

Concept Generation Outcomes

The morphological analysis generated multiple design combinations through the systematic arrangement of bonnet, rear-end, and body shell alternatives. By combining selected sub-solutions from the morphological chart,

three conceptual Shell Eco-marathon Urban Concept vehicle configurations were developed, namely Urban Car 1, Urban Car 2, and Urban Car 3. The use of morphological design enabled the exploration of diverse geometric solutions before detailed aerodynamic assessment, allowing creativity and engineering considerations to be incorporated simultaneously during the concept development phase (Pahl et al., 2007; Chen et al., 2024).

A previously developed UTeM Shell Eco-marathon vehicle served as the reference design during concept development. The baseline vehicle exhibited a triangular body profile that contributed to relatively high aerodynamic resistance, with a drag coefficient of 0.954 and a lift coefficient of 0.897. These values indicated substantial energy losses and highlighted the need for improved aerodynamic design. Findings from previous studies suggest that streamlined body geometries generally outperform triangular vehicle profiles by reducing flow separation and improving airflow attachment around the vehicle body (Abo-Serie, 2017; Lee et al., 2022).

To address these limitations, the newly developed concepts incorporated aerodynamic features such as smoother canopy transitions, enclosed wheel arches, reduced frontal areas, and tapered rear sections. Prior research has shown that such features contribute significantly to drag reduction and improved vehicle stability by minimizing wake turbulence and enhancing pressure recovery behind the vehicle (Abidin et al., 2023; Xia & Huang, 2024).

Aerodynamic Performance Analysis

The aerodynamic performance of the three conceptual designs was evaluated using Autodesk CFD under an inlet velocity of 35 km/h, which represents the typical operating speed of Shell Eco-marathon Urban Concept vehicles (Abidin et al., 2023). The simulations generated aerodynamic force data, including drag force and lift force, which were subsequently used to determine the drag coefficient (C_D) and lift coefficient (C_L) for each configuration.

Urban Car 1

The CFD simulation of Urban Car 1 produced a drag force of 45.82 N and a lift force of 18.28 N. Using a frontal area of 1.4949 m², the resulting drag coefficient and lift coefficient were calculated as 0.539 and 0.215, respectively. Compared with the baseline vehicle, Urban Car 1 demonstrated considerable aerodynamic improvement, reducing drag by approximately 43.5% and lift by approximately 76.0%. The performance improvement can be attributed to smoother surface transitions and improved body contouring compared with the previous triangular design. However, the relatively large frontal area and limited rear taper continued to contribute to flow separation and wake formation behind the vehicle. The geometry generates stronger flow separation at the rear and increased turbulence around the wheel arches, contributing to higher drag and lift forces. Figure 3 therefore highlights the importance of geometric refinement, as even small changes in canopy slope, wheel enclosure, or rear tapering can significantly reduce aerodynamic resistance and improve stability.

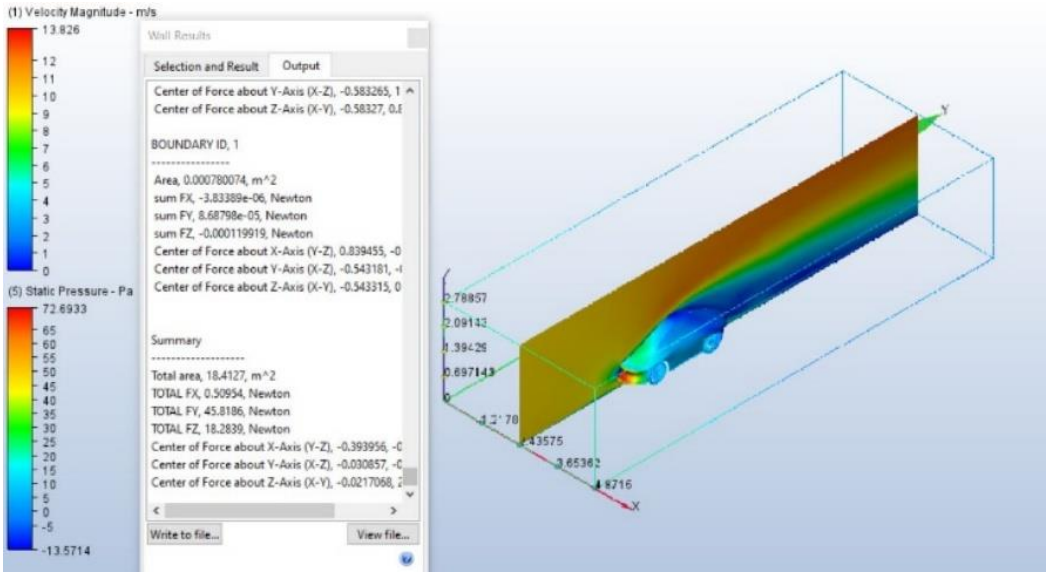

Figure 3. CFD simulation for Urban Car 1

Drag Coefficient (C_D) for Urban Car 1 using Equation 1.

$$C_D = \frac{F_D}{A\frac{\rho v^2}{2}}$$

$$C_D = \frac{45.8186\,N}{85.0624\,N}$$

$$\boldsymbol{C_D = 0.5386}$$

Lift Coefficient (C_L) for Urban Car 1 using Equation 2.

$$C_L = \frac{F_L}{A\frac{\rho v^2}{2}}$$

$$C_L = \frac{18.2839\,N}{85.0624\,N}$$

$$\boldsymbol{C_L = 0.2149}$$

Urban Car 2

Urban Car 2 generated a drag force of 49.21 N and a lift force of 22.94 N during simulation. Despite having a smaller frontal area of 1.3787 m² compared with Urban Car 1, the calculated drag coefficient and lift coefficient were 0.627 and 0.292, respectively. This result demonstrates that reducing frontal area alone does not guarantee improved aerodynamic performance. The body geometry of Urban Car 2 generated greater airflow separation and turbulence, leading to increased aerodynamic resistance. Similar observations were reported by Lee et al. (2022), who emphasized that aerodynamic efficiency is strongly influenced by the overall vehicle shape and flow behaviour rather than frontal area alone. Figure 4 therefore demonstrates that despite a reduced frontal area, poor contouring can negate aerodynamic gains, underscoring the importance of holistic body design.

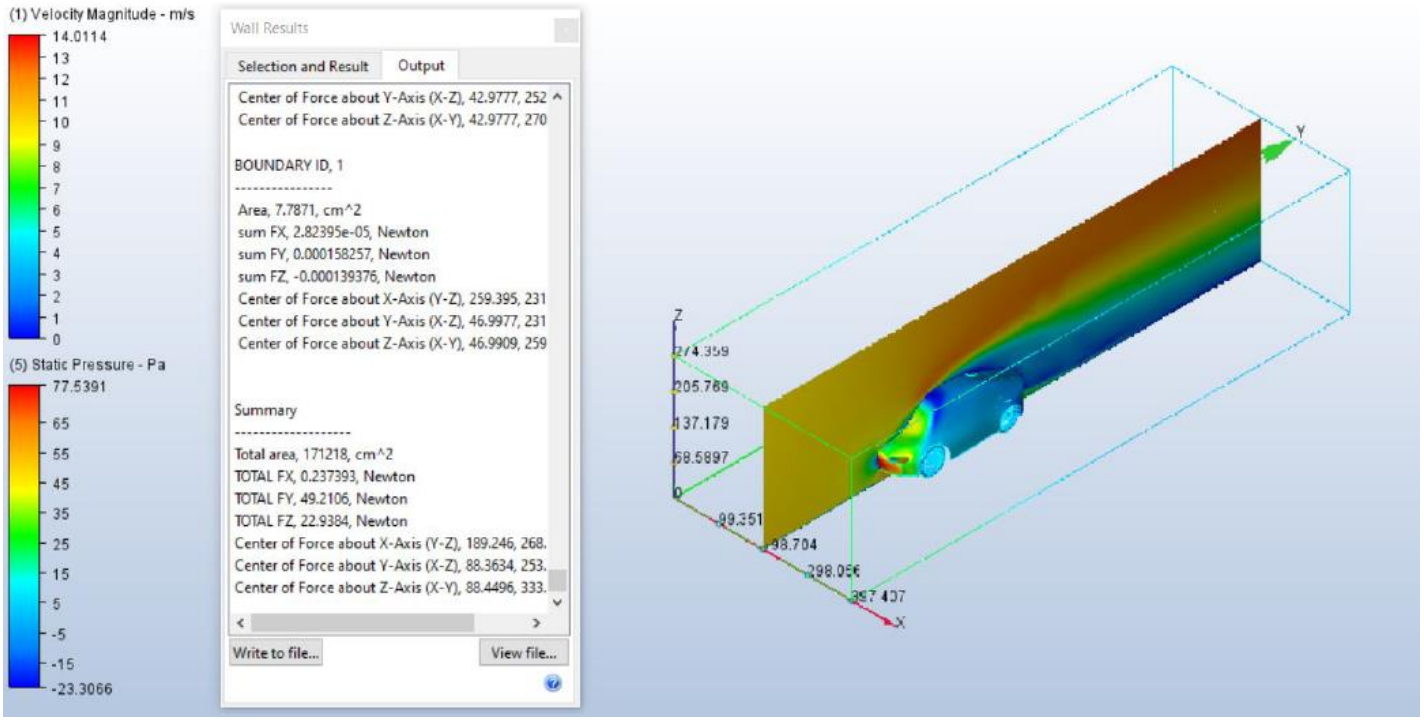

Figure 4. CFD simulation for Urban Car 2

Urban Car 3

Urban Car 3 achieved the best aerodynamic performance among all evaluated concepts. The CFD simulation produced a drag force of 29.48 N and a lift force of 8.59 N. With the smallest frontal area of 1.261 m², the

calculated drag coefficient and lift coefficient were 0.411 and 0.120, respectively. Compared with the baseline vehicle, Urban Car 3 achieved reductions of approximately 56.9% in drag and 86.6% in lift. These results indicate the potential for improved aerodynamic stability; however, experimental validation is required. The superior performance of Urban Car 3 can be attributed to the successful integration of a streamlined body profile, enclosed wheel arches, sloped canopy, and elongated rear taper, which collectively reduced wake turbulence and improved pressure recovery (Xia & Huang, 2024; Abo-Serie, 2017). Figure 5 illustrates that Urban Car 3 exhibited the lowest drag coefficient, suggesting the potential for reduced aerodynamic resistance and improved energy efficiency.

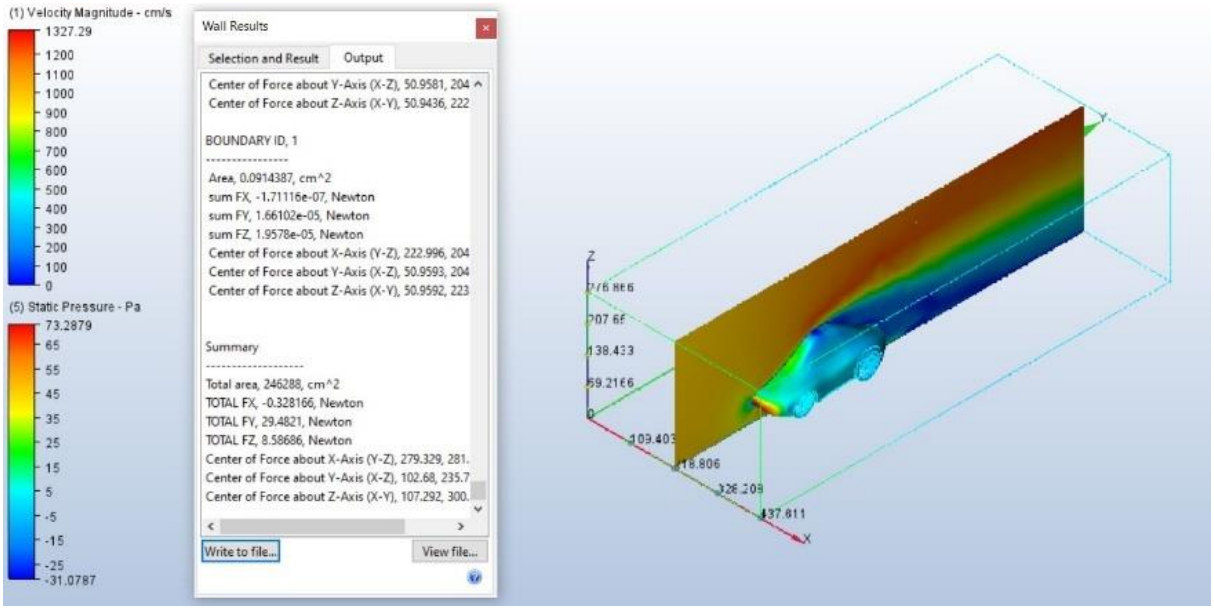

Figure 5. CFD simulation for Urban Car 3

Comparative Aerodynamic Performance

Table 2 summarizes the aerodynamic performance of all vehicle configurations. Among the three concepts, Urban Car 3 consistently recorded the lowest drag and lift coefficients, indicating the most efficient aerodynamic behaviour. Urban Car 1 ranked second, while Urban Car 2 achieved the lowest overall performance despite possessing a smaller frontal area than Urban Car 1. These findings demonstrate that aerodynamic efficiency depends not only on the size of the vehicle but also on the effectiveness of airflow management around the body structure.

Table 2. Comparison of Aerodynamic Performance among Urban Car Designs

Design Configuration	Coefficient of Drag (C_D)	C_D Reduction (%)	Coefficient of Lift (C_L)	C_L Reduction (%)	Ranking
Previous Design	0.954	-	0.897	-	Baseline
Urban Car 1	0.539	43.50%	0.215	76.00%	2nd
Urban Car 2	0.627	34.30%	0.292	67.40%	3rd
Urban Car 3	0.411	56.90%	0.12	86.60%	1st

The comparison highlights three key aerodynamic mechanisms responsible for performance improvements:

- Reduction of frontal area, which lowers pressure drag.
- Improved canopy and body contouring, which promotes smoother airflow attachment.
- Enhanced rear-end tapering, which improves pressure recovery and reduces wake turbulence.

These aerodynamic principles are consistent with findings reported by Abidin et al. (2023), Lee et al. (2022),

and Xia and Huang (2024), who identified streamlined geometries and controlled flow separation as critical factors in achieving high vehicle efficiency.

The findings demonstrate the effectiveness of integrating morphological design and CFD simulation as a systematic vehicle development framework. The morphological analysis facilitated the generation of multiple design alternatives, while CFD simulation provided quantitative evidence for concept selection. Rather than relying solely on designer intuition, the integrated approach enabled objective evaluation of aerodynamic performance during the early stages of development. This finding supports the growing emphasis on structured

concept generation in engineering design, where creativity is complemented by analytical assessment methods (Milovanovic et al., 2021; Chen et al., 2024).

The superior performance of Urban Car 3 illustrates how early-stage design decisions directly influence final vehicle performance. Through the combination of morphological analysis and CFD evaluation, an aerodynamic configuration capable of substantially reducing drag and lift was successfully identified. The approach not only contributes to improved energy efficiency but also provides a repeatable design framework that can be applied to future Shell Eco-marathon vehicle development projects. Furthermore, the significant reduction in drag coefficient suggests a corresponding decrease in propulsion energy requirements, while the reduced lift coefficient indicates the potential for enhanced vehicle stability during operation (Abidin et al., 2023; Setyadi et al., 2024).

Overall, Urban Car 3 emerged as the most suitable design for future development, demonstrating that the integration of morphological design and CFD simulation can effectively support the development of aerodynamically efficient urban concept vehicles.

CONCLUSION

This study successfully demonstrated the integration of morphological design and Computational Fluid Dynamics simulation in the development of an aerodynamically efficient Shell Eco-marathon Urban Concept vehicle. Through the application of morphological analysis, multiple design alternatives were systematically generated and evaluated, allowing concept development to proceed beyond conventional trial-and-error approaches. The integration of structured concept generation with simulation-based assessment provided a comprehensive framework for making informed design decisions during the early stages of vehicle development (Pahl et al., 2007; Chen et al., 2024).

Three conceptual vehicle configurations were developed and assessed using Autodesk CFD under representative competition operating conditions. The simulation results showed that all proposed concepts achieved improved aerodynamic performance compared with the previous UTeM baseline design. Among the evaluated configurations, Urban Car 3 demonstrated the most favourable aerodynamic characteristics, achieving a drag coefficient (C_D) of 0.411 and a lift coefficient (C_L) of 0.120. These values represent substantial improvements over the baseline vehicle, indicating reduced aerodynamic resistance and the potential for lower energy consumption requirements and improved vehicle stability (Abidin et al., 2023; Xia & Huang, 2024).

The findings further reveal that aerodynamic performance depends not only on reducing frontal area but also on the effective integration of streamlined body contours, enclosed wheel arches, optimized canopy geometry, and rear-end tapering. The superior performance of Urban Car 3 confirms that careful consideration of these design features can significantly improve airflow management, reduce wake turbulence, and enhance pressure recovery behind the vehicle, consistent with findings reported in previous aerodynamic studies (Abo-Serie, 2017; Lee et al., 2022).

This study contributes to the growing body of knowledge on energy-efficient vehicle design by demonstrating how morphological design and CFD simulation can be combined as a systematic engineering design framework. The proposed approach provides a practical methodology for evaluating alternative vehicle concepts before prototype fabrication, thereby reducing development time and cost while improving design effectiveness. The framework may also be adapted for other sustainable automotive and low-energy vehicle development projects (Milovanovic et al., 2021; Setyadi et al., 2024).

Although the findings are promising, the present study is limited to numerical simulations conducted under steady-state operating conditions at a single vehicle speed of 35 km/h. Therefore, the aerodynamic performance of the proposed concepts under different operating conditions remains to be investigated. Future work should incorporate experimental validation through wind tunnel testing or on-road performance assessments to verify the CFD predictions. In addition, simulations at multiple vehicle speeds should be conducted to evaluate the consistency of the aerodynamic performance improvements across a wider range of

competition conditions. Additional investigations into underbody aerodynamics, wheel housing optimization, and advanced rear-end geometries may further enhance vehicle efficiency and provide greater insight into the aerodynamic behaviour of Shell Eco-marathon Urban Concept vehicles (Prabhu et al., 2025).

ACKNOWLEDGEMENT

The authors gratefully acknowledge the support received from the Centre for Advanced Research on Energy (CARe) and the Universiti Teknikal Malaysia Melaka, Malacca, Malaysia.

REFERENCES

1. Abo-Serie, E. (2017). Aerodynamics assessment using CFD for a low drag Shell Eco-Marathon car. Journal of Thermal Engineering, 3(6), 1527-1536.
2. Abidin, H. F. Z., Rahman, M. T. A., Adom, A. H., Jamir, M. R. M., Halim, S. S., & Nawi, M. A. H. M. (2023). An analysis of urban vehicle body aerodynamics using computational fluid dynamics for the Shell Eco-Marathon challenge. Journal of Advanced Research in Applied Sciences and Engineering Technology, 30(2), 75-91.
3. Chen, L., Tsang, Y., Jing, Q., & Sun, L. (2024). A LLM-augmented morphological analysis approach for conceptual design. In C. Gray, E. Ciliotta Chehade, P. Hekkert, L. Forlano, P. Ciuccarelli, & P. Lloyd (Eds.), Proceedings of DRS2024: Boston. Design Research Society.
4. Lee, M. W., Tiew, H. S. K., Chang, W. S., Ishak, M. H. H., & Ismail, F. (2022). Drag reduction on a three-dimensional teardrop-shaped body car with different stagnation points. International Journal of Automotive and Mechanical Engineering, 19(3), 9872-9891.
5. Menter, F. R. (1994). Two-equation eddy-viscosity turbulence models for engineering applications. AIAA Journal, 32(8), 1598-1605.
6. Milovanovic, J., Hu, M., Shealy, T., & Gero, J. (2021). Characterization of concept generation for engineering design through temporal brain network analysis. Design Studies, 76, Article 101044. https://doi.org/10.1016/j.destud.2021.101044
7. Pahl, G., Beitz, W., Feldhusen, J., & Grote, K.-H. (2007). Engineering design: A systematic approach (3rd ed.). Springer.
8. Prabhu, M. S., Prabhu, K. S., Murthy, A. A., & G, S. (2025). Aerodynamic drag reduction in commercial vehicle using CFD-based design optimisation. F1000Research, 14, 821.
9. Setyadi, P., Anggrainy, R., & Safira, P. (2024). Aerodynamic analysis of Si Jayaraya: A CFD approach to energy-efficient vehicle design. EVERGREEN Joint Journal of Novel Carbon Resource Sciences & Green Asia Strategy, 11(3), 2618-2623.
10. Tenner, E. (2015). The design of everyday things by Donald Norman. Technology and Culture, 56(3), 785-787.
11. Xia, Z., & Huang, M. (2024). Optimizing the aerodynamic efficiency of electric vehicles via streamlined design: A computational fluid dynamics approach. International Journal of Heat and Technology, 42(3).